YAMAHA

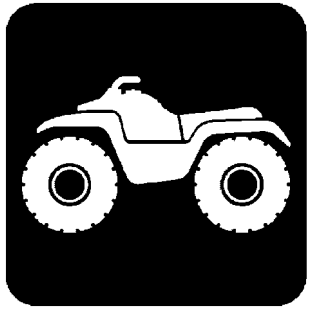

PARTS CATALOGUE

YFM09RYXK (BD3A) OCEANIA
YFM90R (BD3A) MEXICO

YAMAHA GENUINE Parts & Accessories

1UBD3-700E1

( )

YFM09RYXK/YFM90R
PARTS CATALOGUE
©2018 by Yamaha Motor Co., Ltd.
1st edition, April 2018
All rights reserved.
Any reprinting or unauthorized use
without the written permission of
Yamaha Motor Co., Ltd.
is expressly prohibited.
Printed in Japan.

FOREWORD

This Parts Catalogue is related to the parts for the model(s) on the cover page. When you are ordering replacement parts, please refer to this Parts Catalogue and quote both part numbers and part names correctly.

1. Modifications or additions which have been made after the issue of the Parts Catalogue will be announced in the Parts News.
   It is advisable that you make the necessary corrections to the Parts Catalogue according to the Parts News.

2. Abbreviations
   The following abbreviations are used in this Parts Catalogue.

   "UR" Use specified parts number.

   "UN" Use as many as needed.

   "AP" Alternate Parts

   "LM" Locally Made (Parts need to be ordered locally)

   "F#" Frame No. (Applicable machine No.)

   "O/S" Over Size

3. The number of components for assembly
   - Parts, which are to be supplied in an assembly, are listed with a dot (.) in front of the part name as shown below.
   - The numeral appearing to the right of each component part indicates the quantity of parts for each assembly unit.

PART NO.	DESCRIPTION	Q'TY	REMARKS
2F5–83310–60	FRONT FLASHER LIGHT ASSY	2	
115–83311–60	.BULB (6V–18W)	1	

4. Applicable colours of graphics are represented in the "REMARKS" as shown below.

PART NO.	DESCRIPTION	Q'TY	REMARKS
2N4–24110–00–X5	FUEL TANK COMP.	2	MXR
3J1–24240–10	.GRAPHIC, FUEL TANK	1	FOR MXR

5. Note that the illustrations for reference in finding parts numbers are not to be used for assembling. When assembling, please use the applicable service manual.

6. The asterisk (*) before a reference number indicates modified items after the first edition.

7. Applicable Serial No.

Engine Serial No.

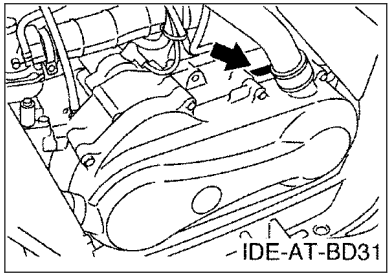

Frame Serial No.

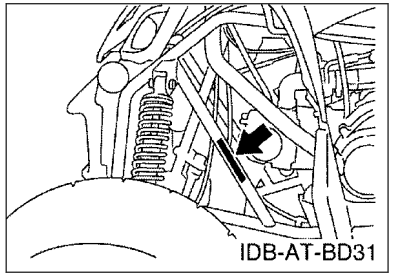

8. Applicable Colour Code (The (*) mark shows Model colour.)

Abbreviation	Colour Name	Colour Code
BWS1(*)	BLUISH WHITE SOLID 1	0892
DPBSE(*)	DEEP PURPLISH BLUE SOLID E	0583

9. Quantity Column Information

Column No.	Name Of Q’ty Column	Destination
1	OCE	OCEANIA
2	MEX	MEXICO

MODEL LABEL

(1) A label called “Model Label” is affixed in the location as indicated in (3) below.
When using this parts catalogue, please be sure to cross–reference the “model code – production code No.” in the catalogue with the “model code – production code No.” indicated on the Model Label affixed onto the product concerned.

(2) “Model Label” Indication

	a b
○	xxxx – xxx
●	x c

a: Model Type Code
b: Production Code No.
c: Colouring Type

○	4TW1–010
●	A

(3) Model Label Affixing Location

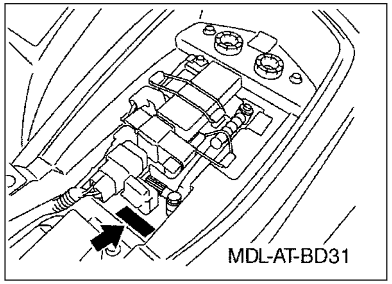

(4) Colouring Information

Model Code	Colouring Type Code	Colour Code	Colour Name	Abbrevia-tion
BD3A	E	0583	DEEP PURPLISH BLUE SOLID E	DPBSE
	F	0892	BLUISH WHITE SOLID 1	BWS1

(5) Model Code – Production Code Number of Model Listed in This Parts Catalogue

Model Code	Production Code No.	Country (destination)
BD3A	020	AUSTRALIA
		NEW ZEALAND
	030	MEXICO

Model Code	Production Code No.	Country (destination)

CONTENTS

ENGINE

CYLINDER HEAD....1
CYLINDER....2
CRANKSHAFT & PISTON....3
VALVE....4
CAMSHAFT & CHAIN....5
OIL PUMP....6
INTAKE....7
CARBURETOR....9
EXHAUST....10
CRANKCASE....11
CRANKCASE COVER 1....13
STARTER....14
CLUTCH....15
TRANSMISSION....16
SHIFT CAM & FORK....18
SHIFT SHAFT....19

CHASSIS

FRAME....20
FRONT FENDER....21
REAR FENDER....22
REAR ARM....23
STEERING....24
FRONT SUSPENSION & WHEEL....26
FUEL TANK....27
SEAT....28
FRONT WHEEL....29
REAR AXLE & WHEEL....30
FRONT BRAKE....31
REAR BRAKE....32
STEERING HANDLE & CABLE....33
STAND & FOOTREST....35
GUARD....36
GENERATOR....37
STARTING MOTOR....38
HEADLIGHT....39
ELECTRICAL 1....40
ELECTRICAL 2....41
GRAPHICS....42
GRAPHICS 2....43
EMBLEM & LABEL 1....44

INDEX

NUMERICAL INDEX....45

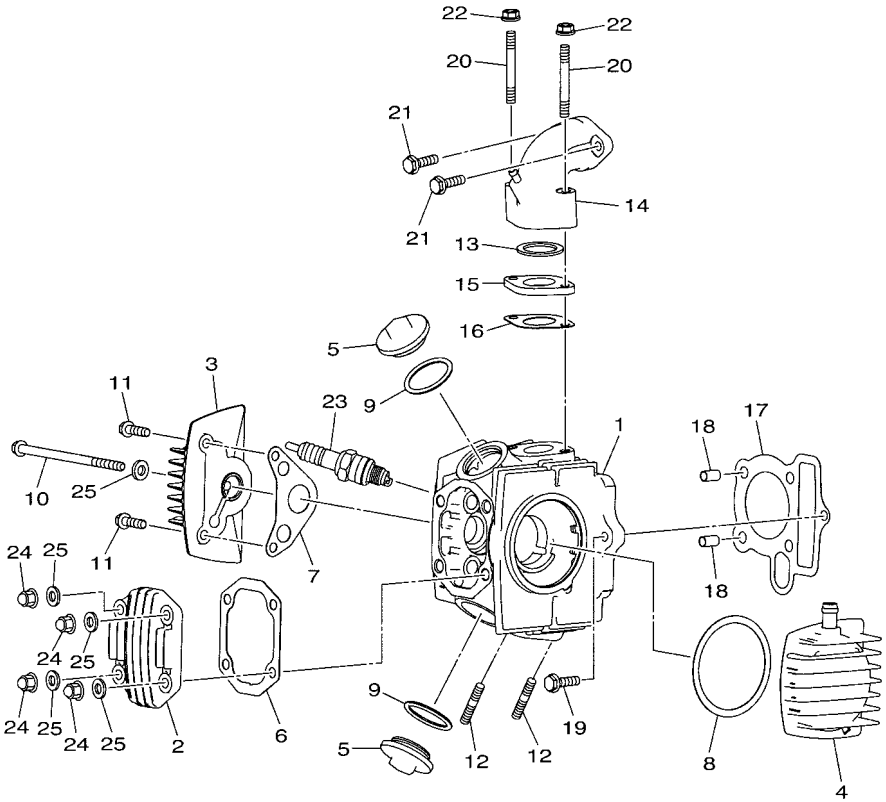

BD31110-R010

FIG. 1 CYLINDER HEAD

REF. NO.	PART NO.	DESCRIPTION	OCE	MEX				REMARKS
1	BD3–E1103–00	CYLINDER HEAD ASSY 2	1	1				
2	BD3–E1192–00	COVER, CYLINDER HEAD 2	1	1				
3	BD3–E112E–00	COVER, CYLINDER HEAD 3	1	1				
4	BD3–E1190–10	COVER, CYLINDER HEAD 1	1	1				
5	BD3–E1186–00	COVER, CYLINDER HEAD SIDE 2	2	2				
6	BD3–E1193–00	GASKET, HEAD COVER 1	1	1				
7	BD3–E1194–00	GASKET, HEAD COVER 2	1	1				
8	BD3–E1169–00	GASKET, BREATHER COVER	1	1				
9	BD3–E119B–00	O-RING	2	2				
10	BD3–E2615–10	BOLT	1	1				
11	BD3–E2623–10	BOLT	2	2				
12	BD3–E1179–10	BOLT, STUD	2	2				
13	BD3–E119A–00	O-RING	1	1				
14	BD3–E3586–00	JOINT, CARBURETOR 1	1	1				
15	BD3–E4271–00	INSULATOR	1	1				
16	BD3–E3556–00	GASKET, MANIFOLD	1	1				
17	BD3–E1181–00	GASKET, CYLINDER HEAD 1	1	1				
18	BD3–E3516–00	PIN, DOWEL	2	2				
19	BD3–E2157–10	BOLT	1	1				
20	BD3–E1391–10	BOLT, STUD 1	2	2				
21	BD3–E2157–10	BOLT	2	2				
22	BD3–F1494–10	NUT	2	2				
23	94701–00372	PLUG SPARK (NGK CR6HSA)	1	1				
24	BD3–E4439–10	NUT	4	4				
25	BD3–E3318–00	WASHER	5	5				

FIG. 2 CYLINDER

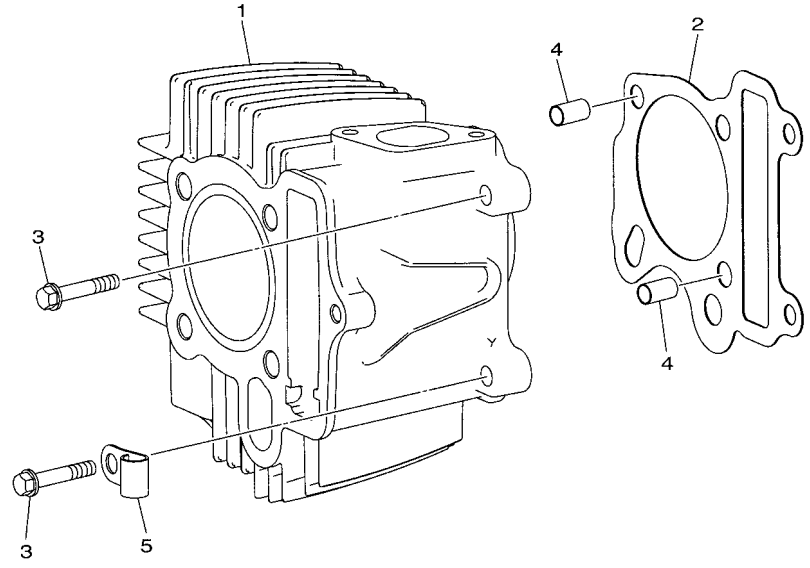

FWD

BD31110-R020

REF. NO.	PART NO.	DESCRIPTION	OCE	MEX				REMARKS
1	BD3–E1311–00	CYLINDER 1	1	1				
2	BD3–E1351–00	GASKET, CYLINDER	1	1				
3	BD3–E2157–10	BOLT	2	2				
4	BD3–E3516–00	PIN, DOWEL	2	2				
5	BD3–E5689–00	RETAINER	2	2				

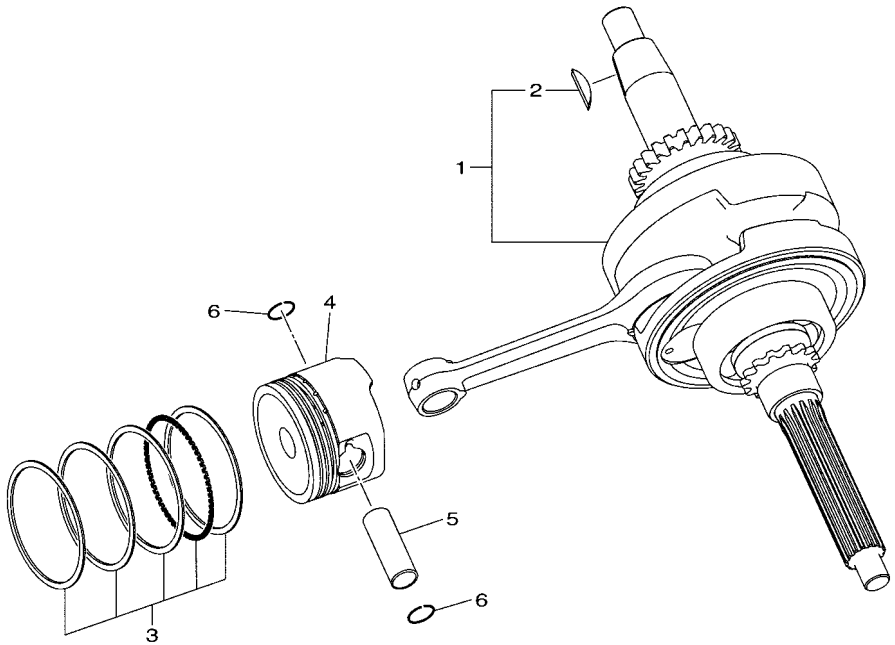

BD31110-R030

FIG. 3 CRANKSHAFT & PISTON

REF. NO.	PART NO.	DESCRIPTION	OCE	MEX				REMARKS
1	BD3–E1400–00	CRANKSHAFT ASSY	1	1				
2	BD3–E1545–00	.KEY, WOODRUFF	1	1				
3	BD3–E1620–00	PISTON RING SET	1	1				
4	BD3–E1631–00	PISTON (STD)	1	1				
5	BD3–E1633–00	PIN, PISTON	1	1				
6	BD3–E1634–00	CLIP, PISTON PIN	2	2				

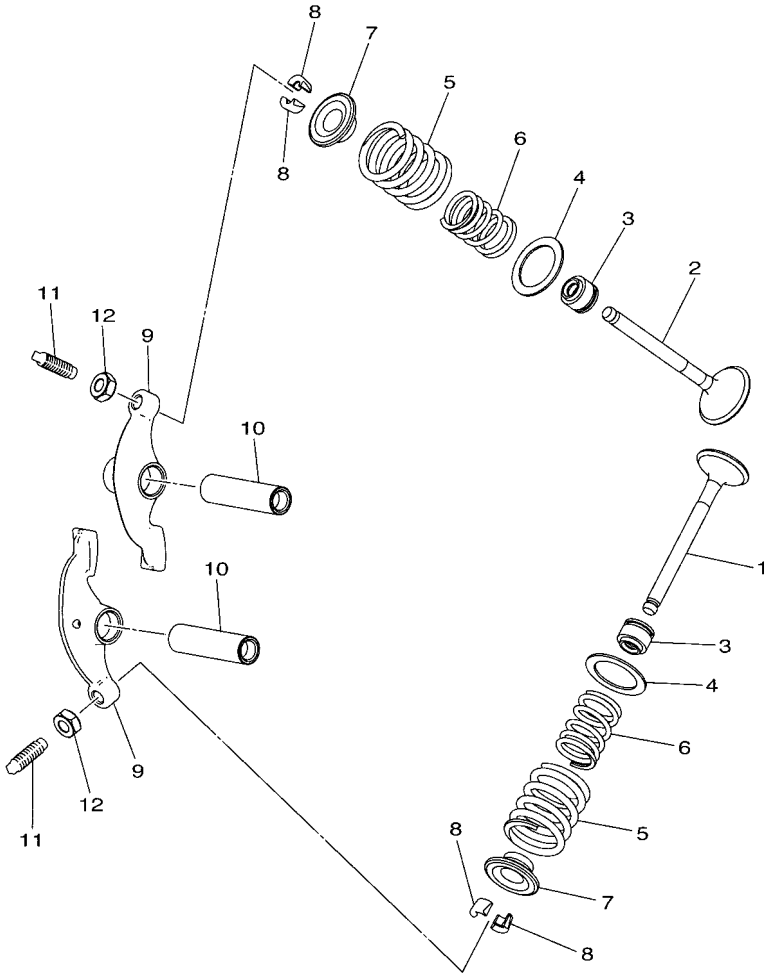

FWD

BD31110-R040

FIG. 4 VALVE

REF. NO.	PART NO.	DESCRIPTION	OCE	MEX				REMARKS
1	BD3–E2121–00	VALVE, EXHAUST	1	1				
2	BD3–E2111–00	VALVE, INTAKE	1	1				
3	BD3–E2119–00	SEAL, VALVE STEM	2	2				
4	BD3–E2116–00	SEAT, VALVE SPRING	2	2				
5	BD3–E2113–00	SPRING, VALVE 1	2	2				
6	BD3–E2114–00	SPRING, VALVE 2	2	2				
7	BD3–E2117–00	RETAINER, VALVE SPRING	2	2				
8	BD3–E2118–00	LOCK, VALVE SPRING RETAINER	4	4				
9	BD3–E2151–00	ARM, VALVE ROCKER	2	2				
10	BD3–E2146–00	SHAFT, ROCKER	2	2				
11	BD3–E2159–00	SCREW, VALVE ADJUSTING	2	2				
12	BD3–E2158–00	NUT, LOCK	2	2				

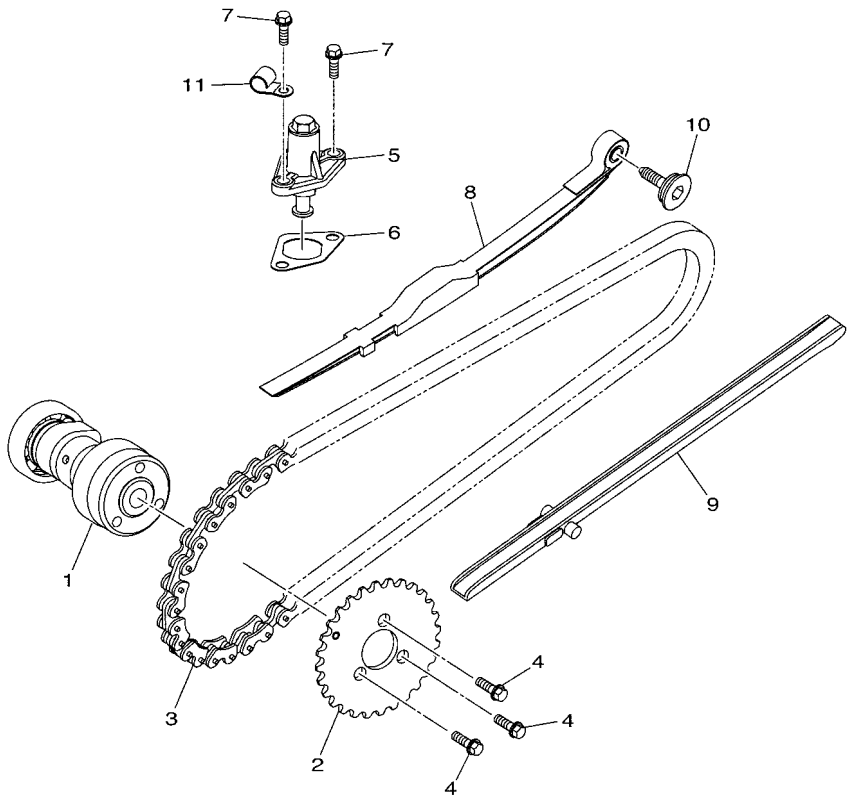

BW41110-S050

FIG. 5 CAMSHAFT & CHAIN

REF. NO.	PART NO.	DESCRIPTION	OCE	MEX				REMARKS
1	BD3–E2170–00	CAMSHAFT ASSY 1	1	1				
2	BD3–E2176–00	SPROCKET, CAM CHAIN	1	1				
3	BD3–E2190–00	CHAIN ASSY	1	1				
4	BD3–E1458–10	BOLT	3	3				
5	BD3–E2210–00	TENSIONER ASSY, CAM CHAIN	1	1				
6	BD3–E2213–00	GASKET, TENSIONER CASE	1	1				
7	BD3–E3573–10	BOLT 1	2	2				
8	BD3–E2241–00	GUIDE, STOPPER 2	1	1				
9	BD3–E2231–00	GUIDE, STOPPER 1	1	1				
10	BD3–E22A1–10	BOLT 2	1	1				
11	BD3–E5689–00	RETAINER	1	1				

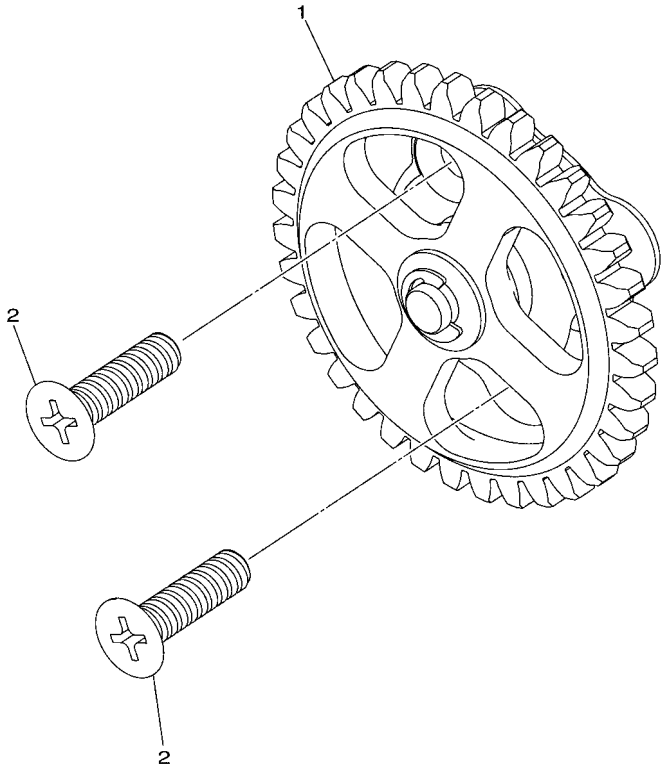

BD31110-R060

FIG. 6 OIL PUMP

REF. NO.	PART NO.	DESCRIPTION	OCE	MEX				REMARKS
1	BD3–E3300–00	OIL PUMP ASSY	1	1				
2	BD3–E3365–10	SCREW, PAN HEAD	2	2				

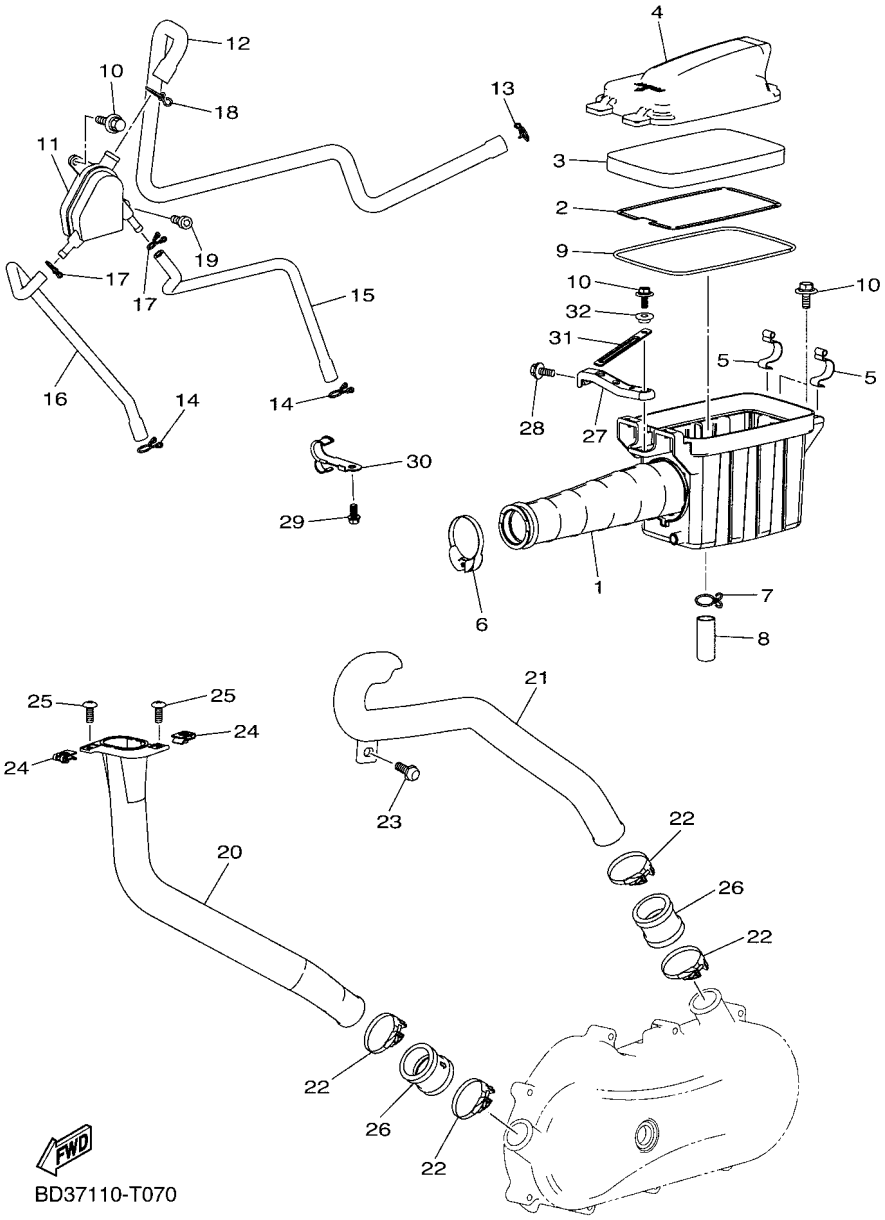

FIG. 7 INTAKE

REF. NO.	PART NO.	DESCRIPTION	OCE	MEX				REMARKS
1	BD3–E4408–10	AIR FILTER CASE COMP.	1	1				
2	BD3–E4472–00	PLATE, ELEMENT	1	1				
3	BD3–E4451–00	ELEMENT, AIR CLEANER	1	1				
4	BD3–E4412–10	CAP, CLEANER CASE 1	1	1				
5	BD3–E4424–00	CLIP, CAP FITTING	2	2				
6	BD3–E2491–10	CLAMP 1	1	1				
7	BD3–E3577–10	CLIP	1	1				
8	BD3–E443E–00	PIPE, DRAIN	1	1				
9	BD3–E4457–00	SEAL	1	1				
10	BD3–E4446–10	BOLT	4	4				
11	BD3–E1164–00	SEPERATOR, OIL	1	1				
12	BD3–E1166–00	PIPE, BREATHER 1	1	1				
13	BD3–E3577–10	CLIP	1	1				
14	BD3–E4137–10	CLIP	2	2				
15	BD3–E1126–00	PIPE, BREATHER 3	1	1				
16	BD3–E1125–00	PIPE, BREATHER 4	1	1				
17	BD3–E4159–10	CLIP	2	2				
18	BD3–E4919–10	CLIP	1	1				
19	BD3–E4777–10	BOLT	1	1				
20	BD3–E5471–00	DUCT, AIR	1	1				
21	BD3–E5473–00	DUCT, AIR	1	1				
22	BD3–E1387–00	CLAMP, HOSE 1	4	4				
23	BD3–F7416–10	BOLT, FOOTREST	1	1				
24	BD3–E261D–10	NUT SPRING 1	2	2				
25	BD3–E5793–10	SCREW	2	2				
26	BD3–E5472–00	SEAL, AIR DUCT	2	2				
27	BD3–E4849–00	BRACKET	1	1				

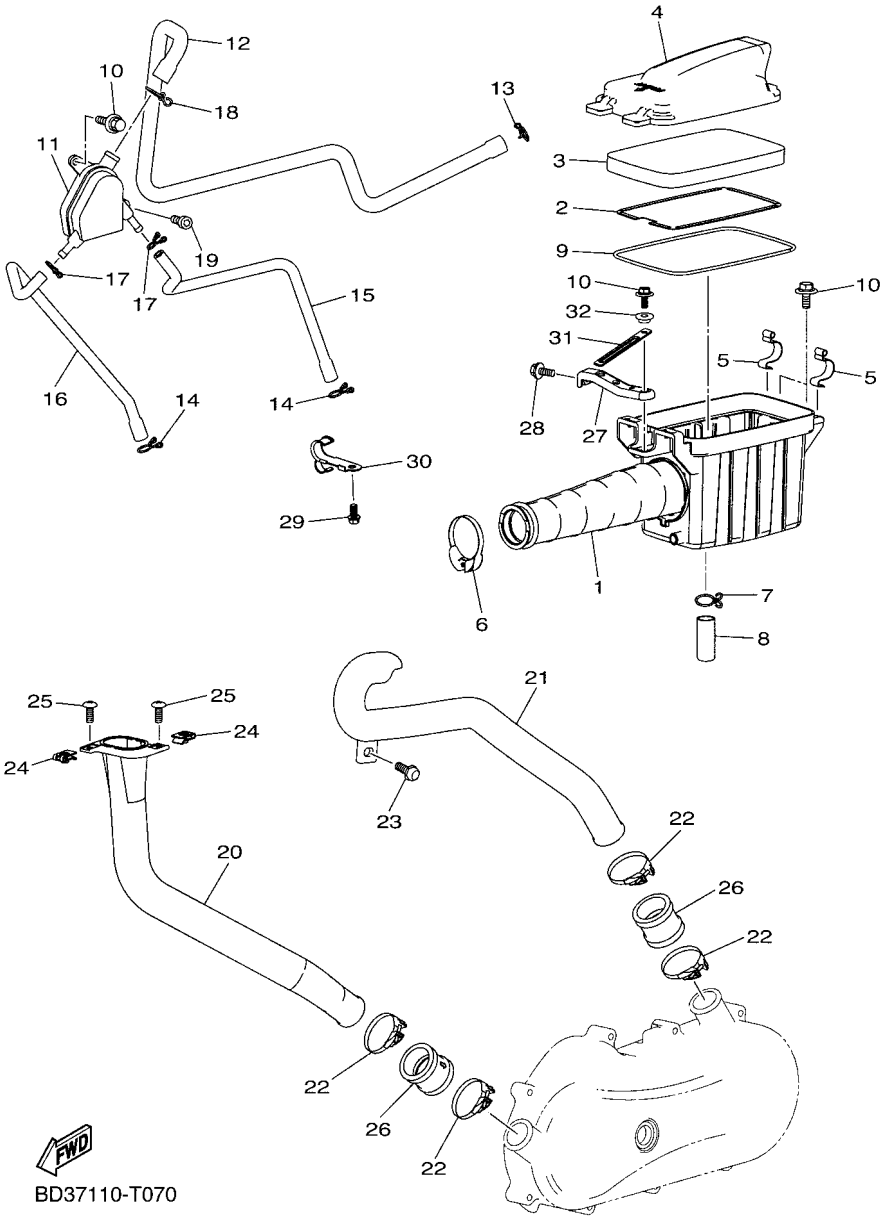

FIG. 7 INTAKE

REF. NO.	PART NO.	DESCRIPTION	OCE	MEX				REMARKS
28	BD3–E2228–10	BOLT	1	1				
29	BD3–E7647–10	BOLT	1	1				
30	BD3–E3274–10	RETAINER	1	1				
31	BD3–E4458–00	GUIDE	1	1				
32	BD3–E4495–00	COLLAR	1	1				

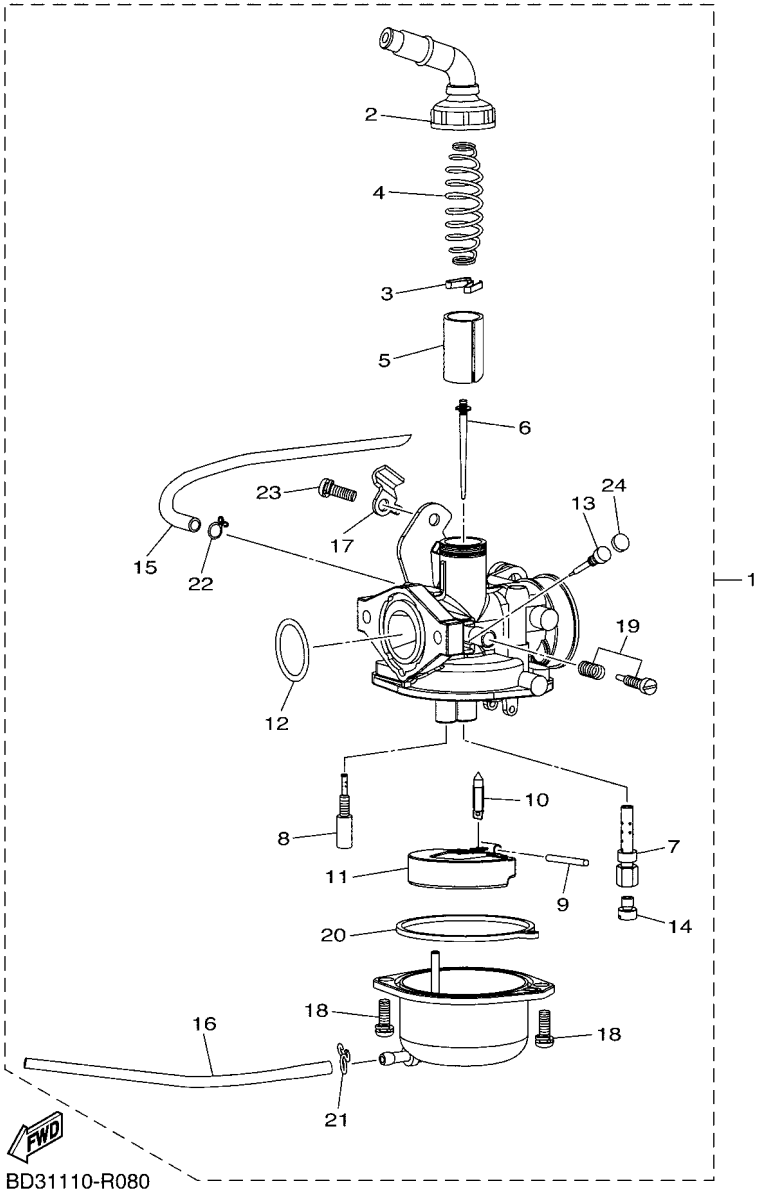

FIG. 8 CARBURETOR

REF. NO.	PART NO.	DESCRIPTION	OCE	MEX				REMARKS
1	BD3–E4101–10	CARBURETOR ASSY 1	1	1				
2	BD3–E439D–10	.CAP, MIXING CHAMBER	1	1				
3	BD3–E439G–00	.CLIP 1	1	1				
4	BD3–E4331–00	.SPRING, THROTTLE VALVE	1	1				
5	BD3–E3731–00	.VALVE, THROTTLE	1	1				
6	BD3–E4150–00	.NEEDLE ASSY	1	1				
7	BD3–E414G–00	.PIPE, MAIN BLEED	1	1				
8	BD3–E4942–00	.JET, PILOT	1	1				
9	BD3–E4386–00	.PIN, FLOAT	1	1				
10	BD3–E4392–00	.VALVE, NEEDLE	1	1				
11	BD3–E4385–00	.FLOAT	1	1				
12	BD3–E4397–00	.O-RING	1	1				
13	BD3–E4211–00	.SCREW, PILOT ADJUSTING	1	1				
14	BD3–E415A–00	.JET, MAIN	1	1				
15	BD3–E4348–00	.PIPE 1	1	1				
16	BD3–E4349–00	.PIPE	1	1				
17	BD3–E4581–10	.BRACKET	1	1				
18	BD3–E4325–00	.SCREW, PAN HEAD	2	2				
19	BD3–E4521–00	.SCREW, ADJUST	1	1				
20	BD3–E4384–00	.GASKET, FLOAT CHAMBER	1	1				
21	BD3–E439H–10	.CLIP 2	1	1				
22	BD3–E449C–10	.CLIP 1	1	1				
23	BD3–E4216–10	.SCREW	1	1				
24	BD3–E443B–00	.PLUG, BLIND	1	1				

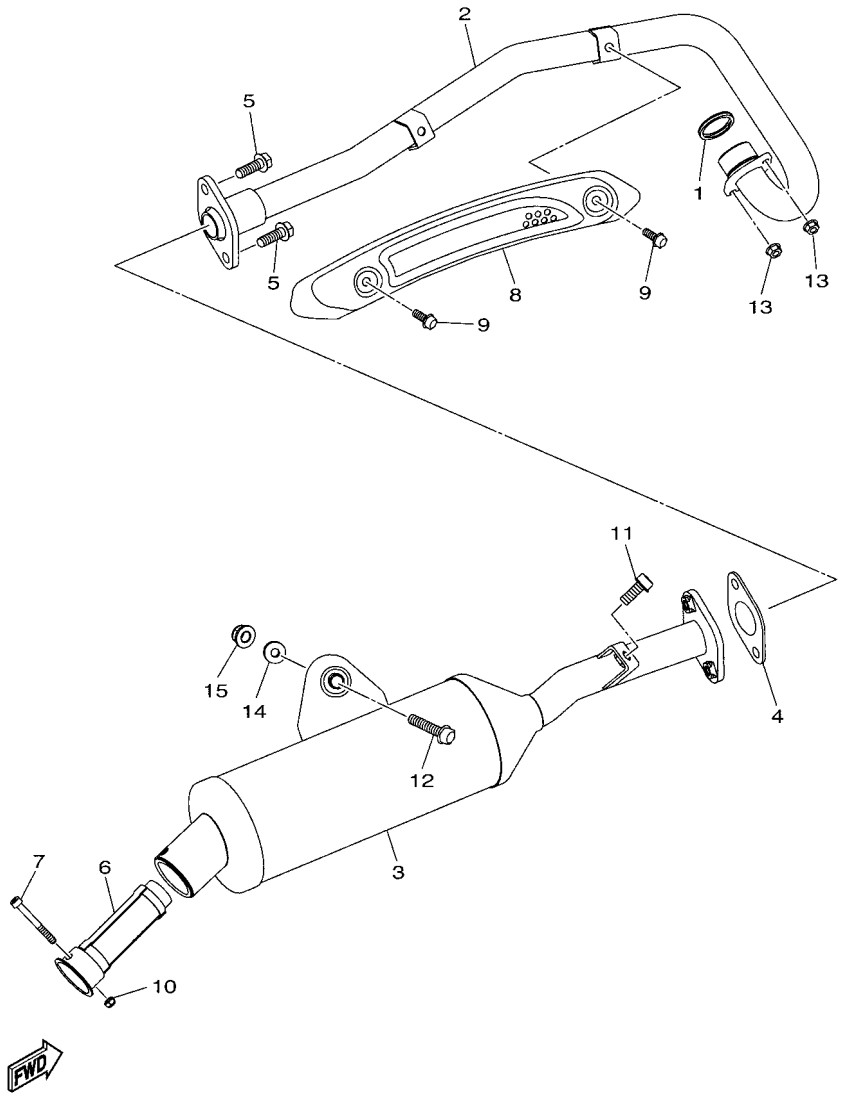

BD31110-R090

FIG. 9 EXHAUST

REF. NO.	PART NO.	DESCRIPTION	OCE	MEX				REMARKS
1	BD3–E4613–00	GASKET, EXHAUST PIPE	1	1				
2	BD3–E4611–00	PIPE, EXHAUST 1	1	1				
3	BD3–E4711–00	MUFFLER 1	1	1				
4	BD3–E4714–00	GASKET, MUFFLER	1	1				
5	BD3–E5768–00	BOLT	2	2				
6	BD3–E4780–00	SPARK ARRESTER ASSY	1	1				
7	BD3–E3574–00	BOLT 2	1	1				
8	BD3–E4628–00	PROTECTOR, EXHAUST PIPE	1	1				
9	BD3–E6194–00	BOLT, HEXAGON WITH WASHER	2	2				
10	BD3–E4358–00	NUT	1	1				
11	BD3–F3876–10	BOLT	1	1				
12	BD3–E6777–10	BOLT	1	1				
13	BD3–F1494–10	NUT	2	2				
14	BD3–E2289–10	WASHER	1	1				
15	BD3–F1635–10	NUT, REAR FENDER	1	1				

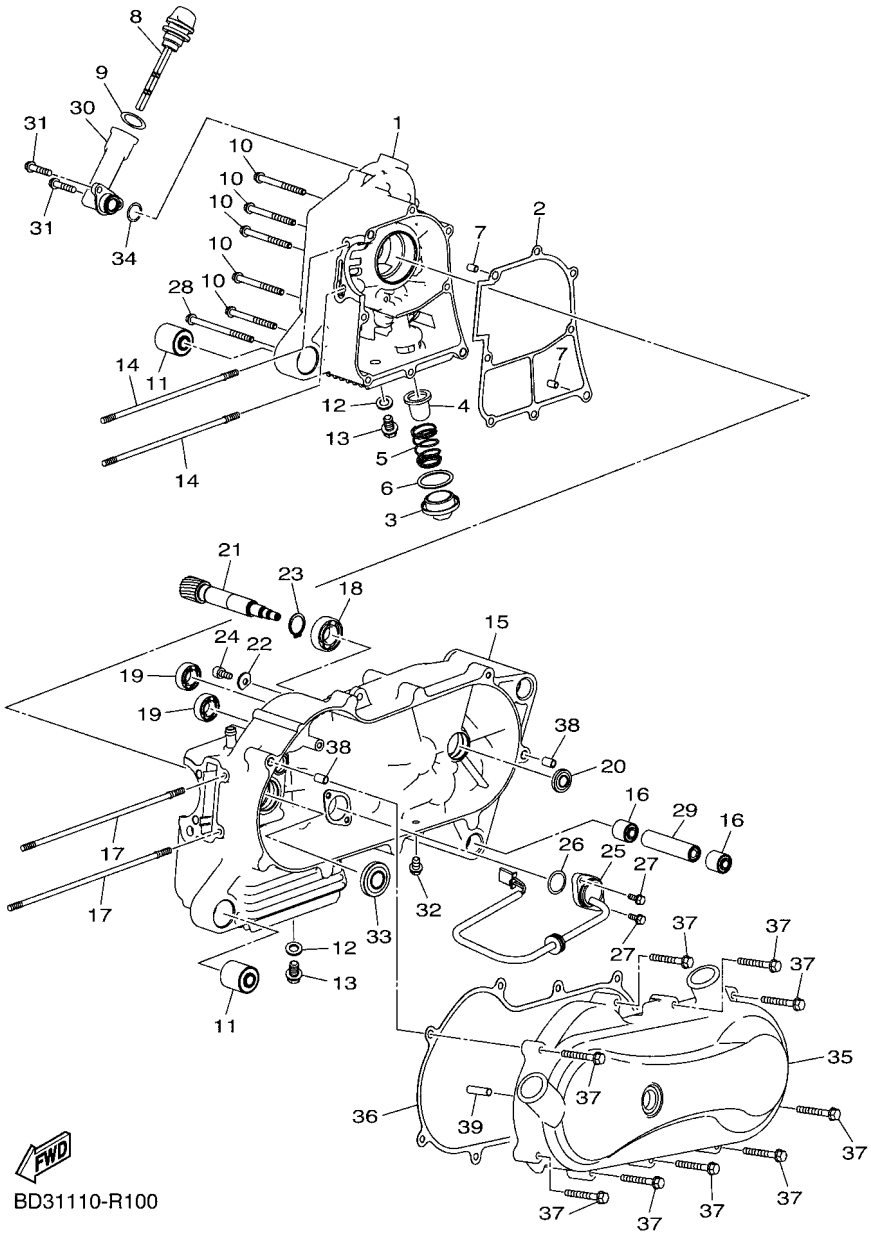

FIG. 10 CRANKCASE

REF. NO.	PART NO.	DESCRIPTION	OCE	MEX				REMARKS
1	BD3–E5121–00	CRANKCASE 2	1	1				
2	BD3–E5314–00	GASKET, CRANKCASE 1	1	1				
3	BD3–E5351–00	PLUG, DRAIN	1	1				
4	BD3–E3411–00	STRAINER, OIL	1	1				
5	BD3–E3469–00	SPRING	1	1				
6	BD3–E119B–00	O-RING	1	1				
7	BD3–E3516–00	PIN, DOWEL	2	2				
8	BD3–E5362–00	PLUG, OIL LEVEL	1	1				
9	BD3–E2843–00	O-RING	1	1				
10	BD3–H1826–10	BOLT	5	5				
11	BD3–E4844–00	DAMPER	2	2				
12	BD3–E5158–00	WASHER	2	2				
13	BD3–G2544–10	BOLT	2	2				
14	BD3–G2742–10	BOLT	2	2				
15	BD3–E5111–10	CRANKCASE 1	1	1				
16	BD3–E5328–00	SPACER, DAMPER	2	2				
17	BD3–G3143–10	BOLT	2	2				
18	BD3–E1428–00	BEARING 1	1	1				
19	BD3–E1429–00	BEARING 2	2	2				
20	BD3–E511A–00	OIL SEAL	1	1				
21	BD3–E6111–00	GEAR, PRIMARY DRIVE	1	1				
22	BD3–E511B–10	OIL SEAL	1	1				
23	BD3–E5744–00	CIRCLIP	1	1				
24	BD3–G3886–10	BOLT	1	1				
25	BD3–H2540–00	NEUTRAL SWITCH ASSY	1	1				
26	BD3–E2439–00	O-RING	1	1				
27	BD3–G4581–10	BOLT	2	2				

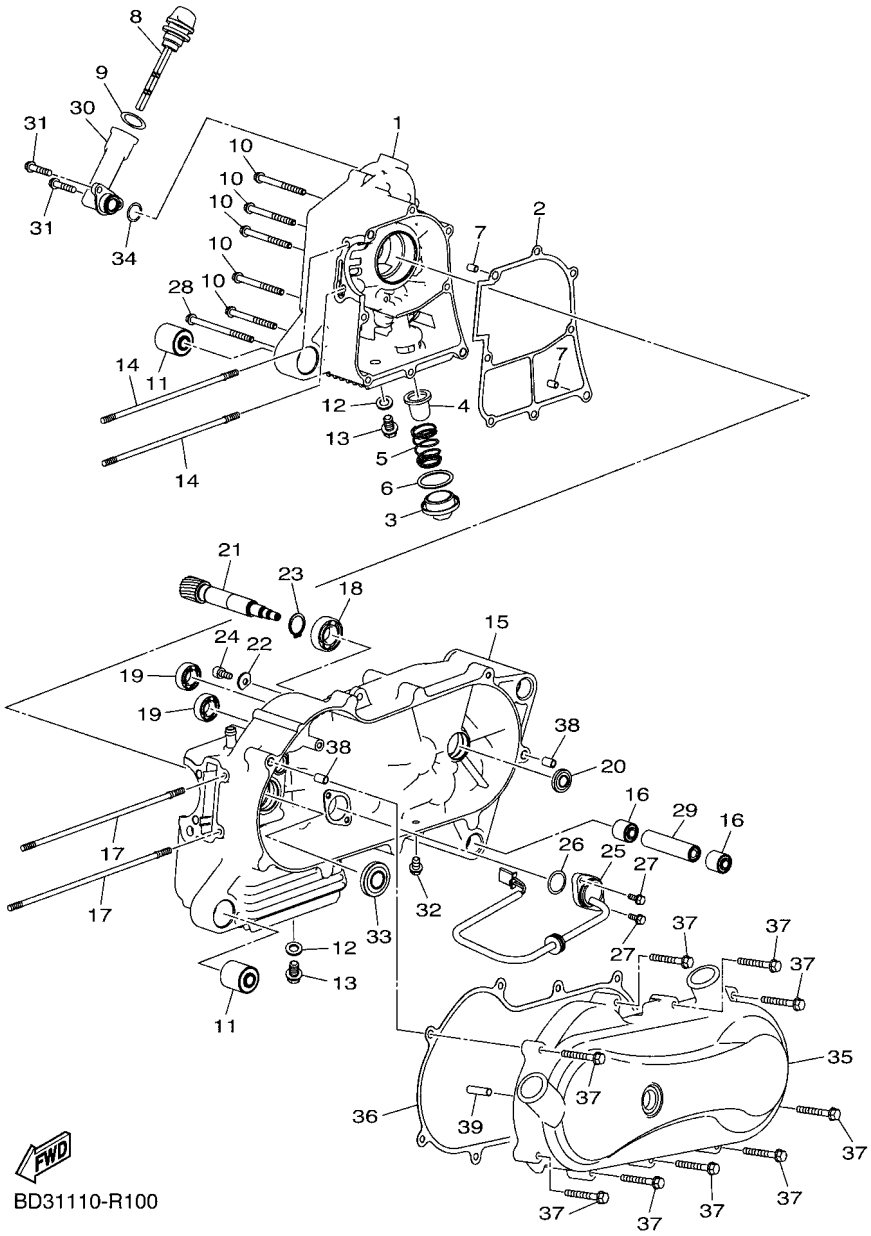

FIG. 10 CRANKCASE

REF. NO.	PART NO.	DESCRIPTION	OCE	MEX				REMARKS
28	BD3–G5154–10	BOLT	1	1				
29	BD3–E5327–10	SPACER, ENGINE MOUNT	1	1				
30	BD3–E5112–00	PIPE, OIL	1	1				
31	BD3–E2623–10	BOLT	2	2				
32	BD3–G5241–10	BOLT, FLANGE W/WASHER	1	1				
33	BD3–E5315–00	SEAL, CRANKCASE	1	1				
34	BD3–E5114–00	O-RING	1	1				
35	BD3–E5411–10	COVER, CRANKCASE 1	1	1				
36	BD3–E5451–00	GASKET, CRANKCASE COVER 1	1	1				
37	BD3–G1148–10	BOLT	9	9				
38	BD3–E3516–00	PIN, DOWEL	2	2				
39	BD3–E5521–00	SHAFT 1	1	1				

FIG. 11 CRANKCASE COVER 1

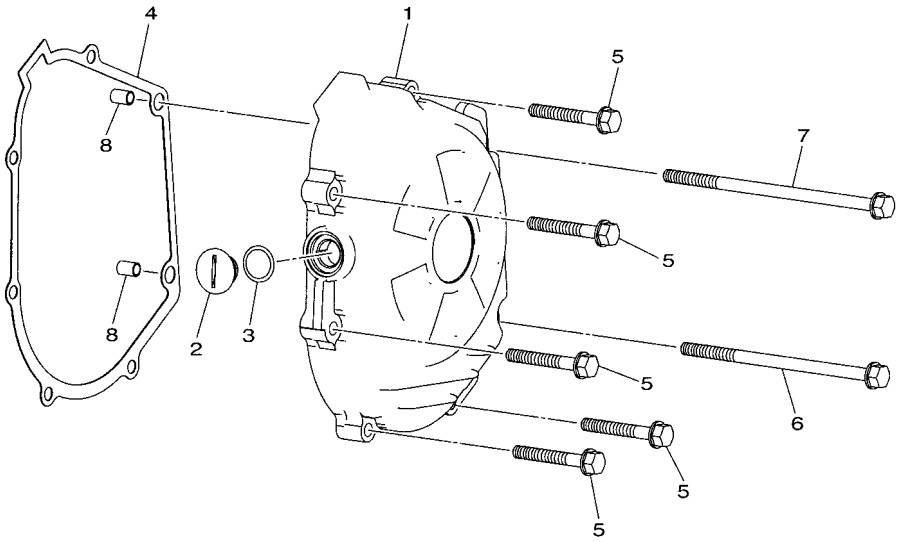

BD31110-R110

REF. NO.	PART NO.	DESCRIPTION	OCE	MEX				REMARKS
1	BD3–E5414–10	COVER 1	1	1				
2	BD3–E5189–00	PLUG	1	1				
3	BD3–E511C–00	OIL SEAL	1	1				
4	BD3–E5462–00	GASKET, CRANKCASE COVER 3	1	1				
5	BD3–G6249–10	BOLT	5	5				
6	BD3–G7542–10	BOLT	1	1				
7	BD3–G7553–10	BOLT	1	1				
8	BD3–E3516–00	PIN, DOWEL	2	2				

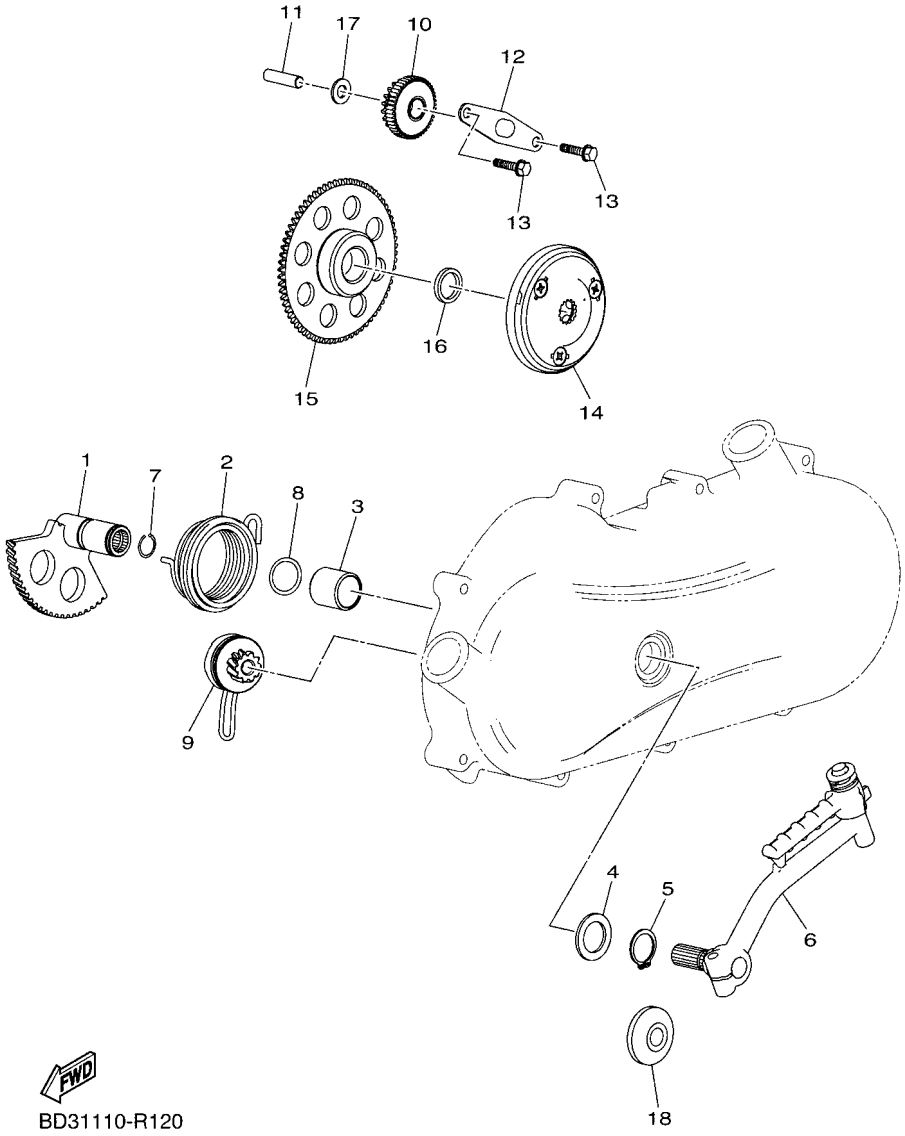

FIG. 12 STARTER

REF. NO.	PART NO.	DESCRIPTION	OCE	MEX				REMARKS
1	BD3–E5600–10	KICK SHAFT UNIT ASSY	1	1				
2	BD3–E5665–00	SPRING, KICK	1	1				
3	BD3–E5677–00	BOSS, KICK AXLE	1	1				
4	BD3–E2456–10	WASHER	1	1				
5	BD3–E662A–00	CIRCLIP	1	1				
6	BD3–E5620–00	KICK CRANK ASSY	1	1				
7	BD3–E5597–00	CIRCLIP 2	1	1				
8	BD3–E3016–00	O-RING	1	1				
9	BD3–E5670–00	KICK PINION ASSY 2	1	1				
10	BD3–E5512–00	GEAR, IDLER 1	1	1				
11	BD3–E5521–00	SHAFT 1	1	1				
12	BD3–E5532–00	PLATE, IDLE GEAR	1	1				
13	BD3–G1228–10	BOLT	2	2				
14	BD3–E5524–10	WHEEL, STARTER	1	1				
15	BD3–E5570–00	STARTER CLUTCH ASSY	1	1				
16	BD3–E5613–10	WASHER	1	1				
17	BD3–E5615–10	WASHER	1	1				
18	BD3–E5681–00	PLUG, BLIND	1	1				

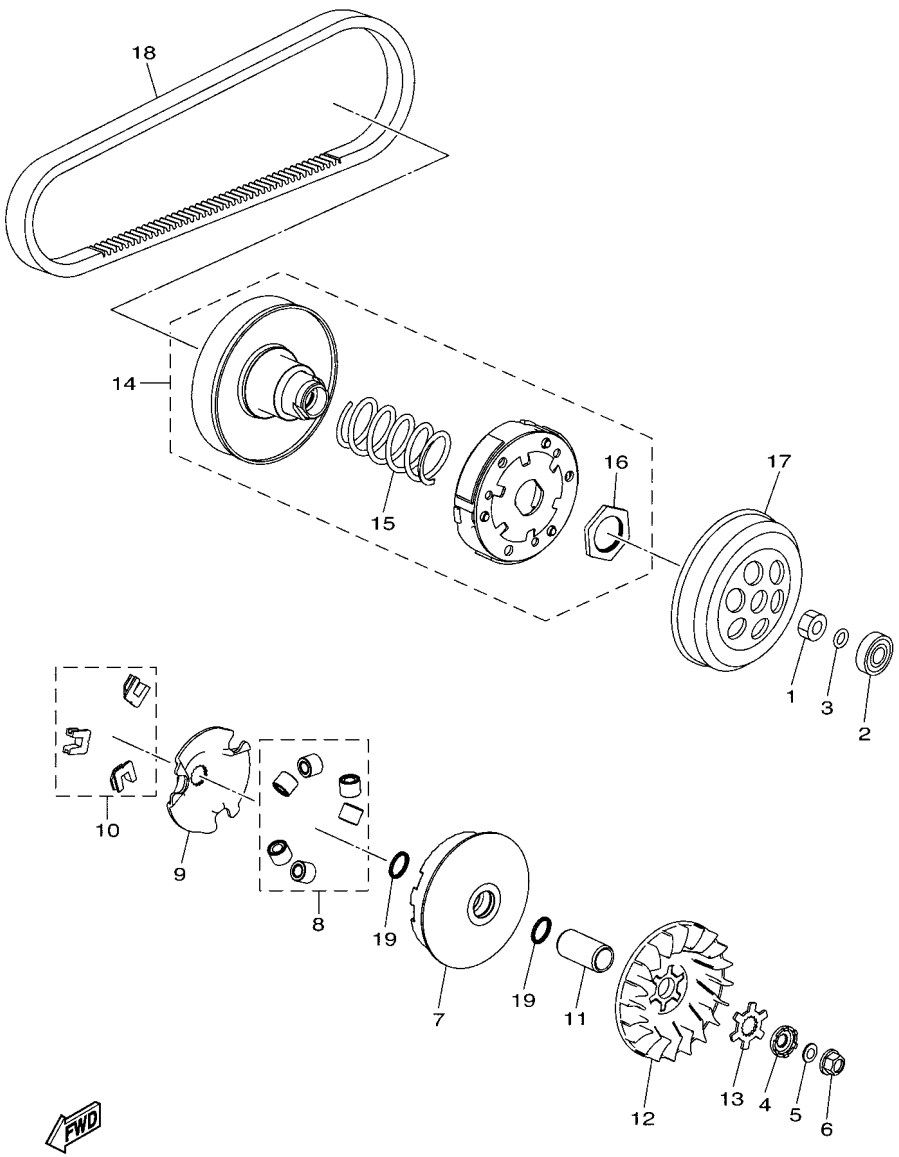

BD31110-R130

FIG. 13 CLUTCH

REF. NO.	PART NO.	DESCRIPTION	OCE	MEX				REMARKS
1	BD3–E4594–10	NUT	1	1				
2	BD3–E7156–00	BEARING 1	1	1				
3	BD3–E3769–00	O-RING	1	1				
4	BD3–E5657–00	CLUTCH, ONEWAY	1	1				
5	BD3–F3427–00	WASHER	1	1				
6	BD3–F3834–10	NUT 2	1	1				
7	BD3–E7621–00	SHEAVE, PRIMARY SLIDING	1	1				
8	BD3–E7632–00	WEIGHT	1	1				
9	BD3–E7623–00	CAM	1	1				
10	BD3–E7625–00	BUSH	1	1				
11	BD3–E7637–00	BUSH	1	1				
12	BD3–E7611–00	SHEAVE, PRIMARY FIXED	1	1				
13	BD3–E7646–00	WASHER, LOCK	1	1				
14	BD3–E6620–10	CLUTCH CARRIER ASSY	1	1				
15	BD3–E7683–00	.SPRING, SECONDARY	1	1				
16	BD3–E4595–10	.NUT	1	1				
17	BD3–E6611–00	CLUTCH HOUSING COMP.	1	1				
18	BD3–E7641–00	V-BELT	1	1				
19	BD3–E76F3–00	OIL SEAL	2	2				

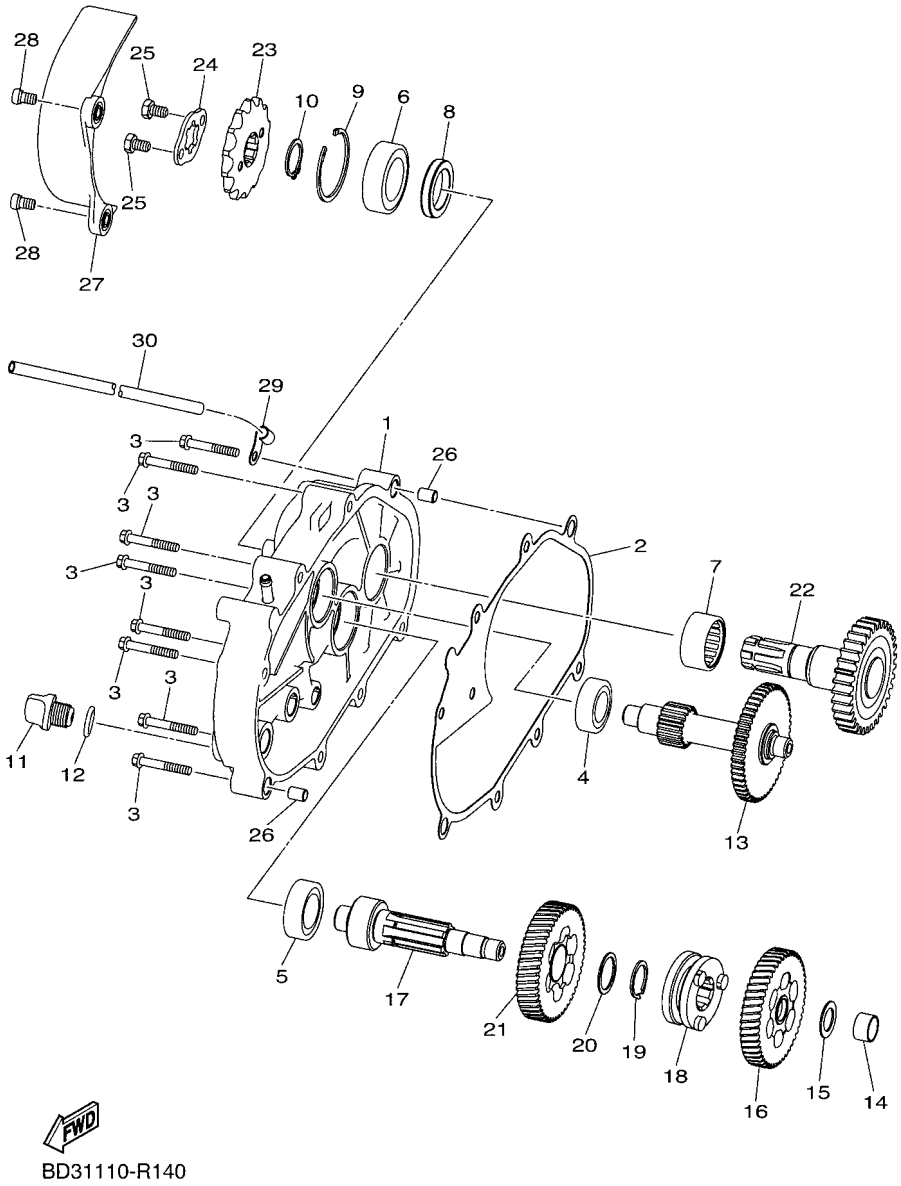

BD31110-R140

FIG. 14 TRANSMISSION

REF. NO.	PART NO.	DESCRIPTION	OCE	MEX				REMARKS
1	BD3–E5420–10	CRANKCASE COVER ASSY 2	1	1				
2	BD3–E5461–00	GASKET, CRANKCASE COVER 2	1	1				
3	BD3–G1148–10	BOLT	8	8				
4	BD3–E1429–00	BEARING 2	1	1				
5	BD3–E4814–00	BEARING	1	1				
6	BD3–E5693–00	BEARING	1	1				
7	BD3–E7678–00	BEARING	1	1				
8	BD3–E4005–00	RING, SEAL	1	1				
9	BD3–E2842–00	CIRCLIP	1	1				
10	BD3–E662A–00	CIRCLIP	1	1				
11	BD3–E5363–00	PLUG, OIL	1	1				
12	BD3–E4561–00	O-RING	1	1				
13	BD3–E7430–00	COUNTER AXLE ASSY	1	1				
14	BD3–E1478–00	COLLAR	1	1				
15	BD3–E3578–00	WASHER	1	1				
16	BD3–E6151–00	GEAR, PRIMARY DRIVEN	1	1				
17	BD3–E7421–00	AXLE, DRIVE	1	1				
18	BD3–E7285–00	CLUTCH, DOG	1	1				
19	BD3–E551A–00	CIRCLIP 1	1	1				
20	BD3–E3995–00	WASHER	1	1				
21	BD3–E7253–00	GEAR, REVERSE WHEEL 2	1	1				
22	BD3–E7520–00	DRIVE PINION ASSY	1	1				
23	BD3–E7451–00	SPROCKET, DRIVE	1	1				
24	BD3–E7446–10	PLATE	1	1				
25	BD3–E2299–10	BOLT, STOPPER	2	2				
26	BD3–E7498–00	PIN, DOWEL	2	2				
27	BD3–E5418–00	COVER, CHAIN CASE	1	1				

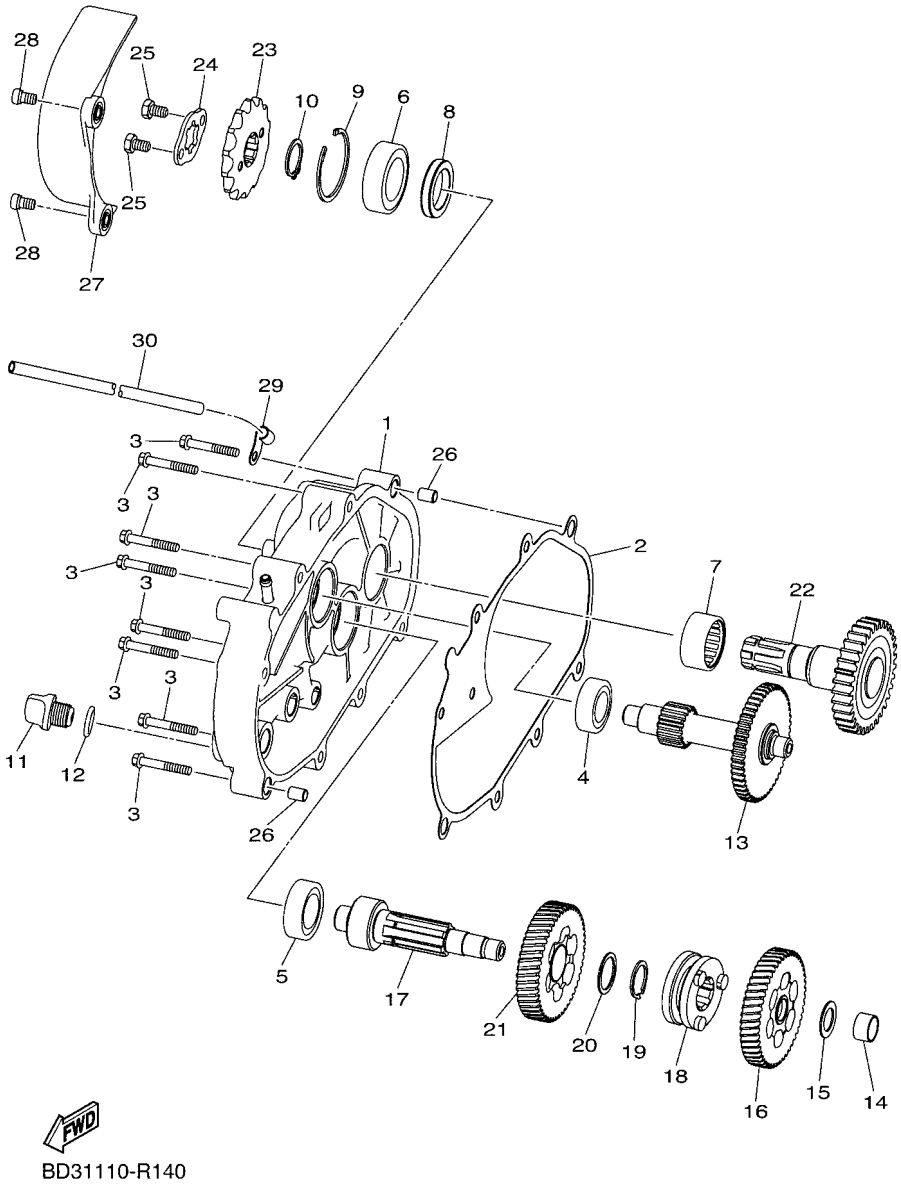

BD31110-R140

FIG. 14 TRANSMISSION

REF. NO.	PART NO.	DESCRIPTION	OCE	MEX				REMARKS
28	BD3–E4429–10	SCREW	2	2				
29	BD3–E5689–00	RETAINER	1	1				
30	BD3–E531A–00	HOSE, BREATHER 1	1	1				

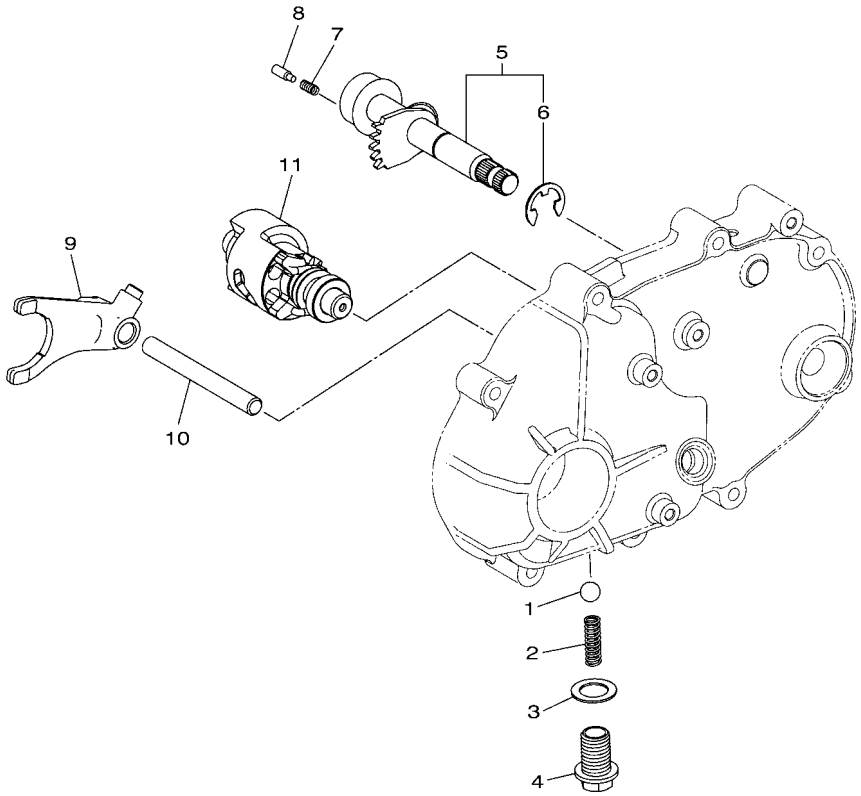

BD31110-R150

FIG. 15 SHIFT CAM & FORK

REF. NO.	PART NO.	DESCRIPTION	OCE	MEX				REMARKS
1	BD3–E7051–00	BALL	1	1				
2	BD3–E7479–00	SPRING, BALL HOLD	1	1				
3	BD3–E7058–00	WASHER,1	1	1				
4	BD3–E765G–10	SCREW, FIXED	1	1				
5	BD3–E8103–10	SHIFT SHAFT COMP.	1	1				
6	BD3–HA906–00	.CIRCLIP 1	1	1				
7	BD3–E8545–00	SPRING	1	1				
8	BD3–E8542–00	POINT, NEUTRAL	1	1				
9	BD3–E8511–00	FORK, SHIFT 1	1	1				
10	BD3–E8531–00	BAR, SHIFT FORK GUIDE 1	1	1				
11	BD3–E8540–00	SHIFT CAM ASSY	1	1				

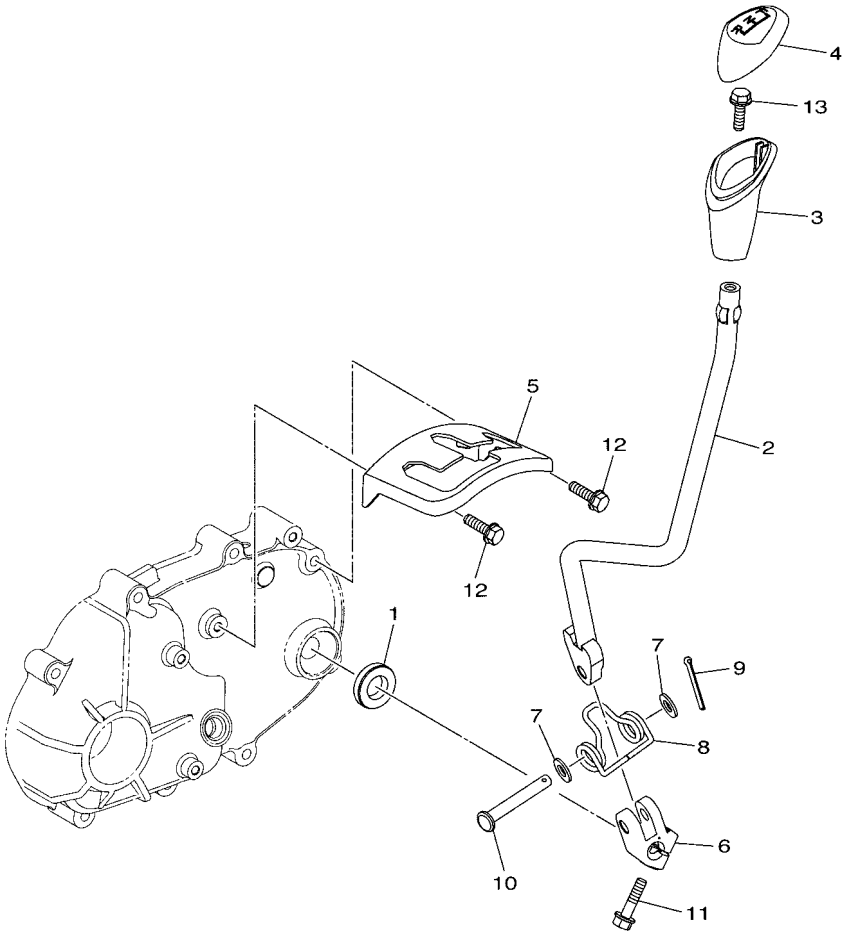

BD31110-R160

FIG. 16 SHIFT SHAFT

REF. NO.	PART NO.	DESCRIPTION	OCE	MEX				REMARKS
1	BD3–G3882–00	OIL SEAL	1	1				
2	BD3–E8190–00	LEVER COMP. 1	1	1				
3	BD3–E8174–00	KNOB, SHIFT LEVER	1	1				
4	BD3–E7496–00	KNOB	1	1				
5	BD3–E8172–00	GUIDE, SHIFT	1	1				
6	BD3–E8179–00	GUIDE	1	1				
7	BD3–E5615–10	WASHER	2	2				
8	BD3–E8196–00	SPRING, RETURN	1	1				
9	BD3–F146E–10	PIN 2	1	1				
10	BD3–E8125–10	SHAFT, SHIFT	1	1				
11	BD3–G8171–10	BOLT	1	1				
12	BD3–H1452–10	BOLT	2	2				
13	BD3–H1552–10	BOLT	1	1				

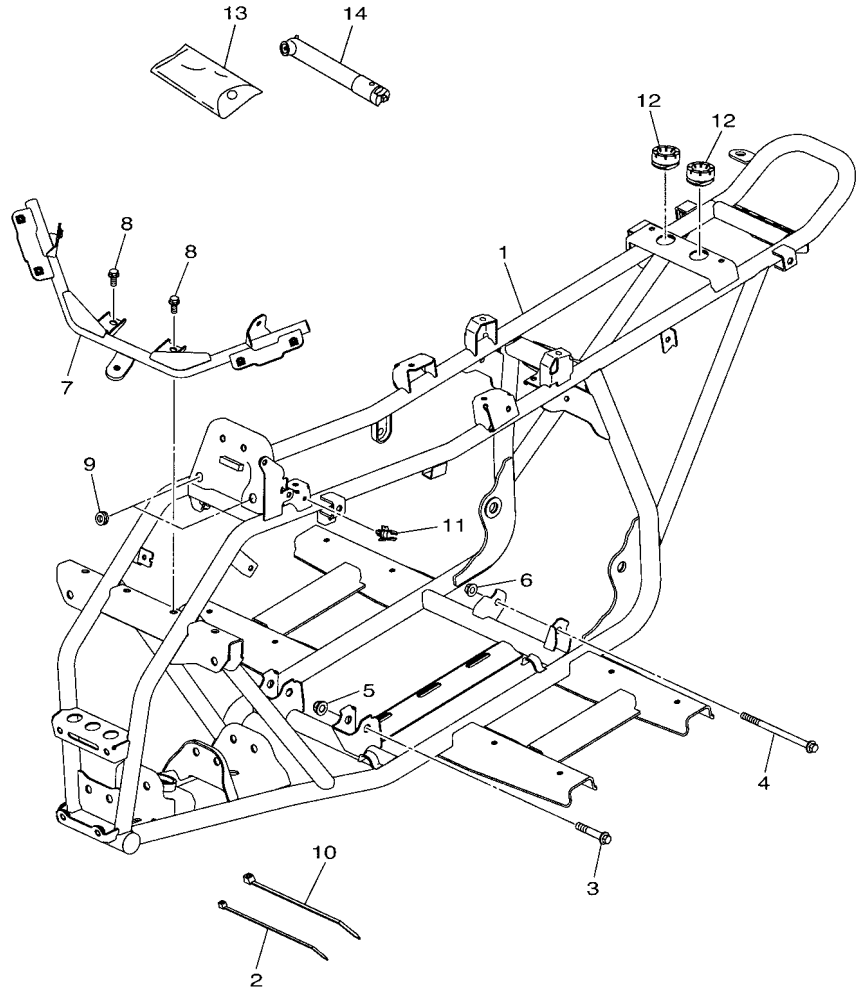

FWD

BD37110-T170

FIG. 17 FRAME

REF. NO.	PART NO.	DESCRIPTION	OCE	MEX				REMARKS
1	BD3–F1110–10	FRAME COMP.	1	1				
2	BD3–F1646–00	BAND	9	9				
3	BD3–F6332–10	BOLT	2	2				
4	BD3–F4178–10	BOLT 3	1	1				
5	BD3–F1839–10	NUT	2	2				
6	BD3–F3778–10	NUT	1	1				
7	BD3–F1513–00	STAY, FENDER 1	1	1				
8	BD3–F4176–10	BOLT 1	2	2				
9	BD3–F1719–00	GROMMET	2	2				
10	BD3–F1647–00	BAND	1	1				
11	BD3–F15A3–00	CLAMP	1	1				
12	BD3–F113B–00	DAMPER	2	2				
13	BD3–F8100–10	TOOL KIT	1	1				
14	BD3–F811A–10	GAUGE, AIR	1	1				

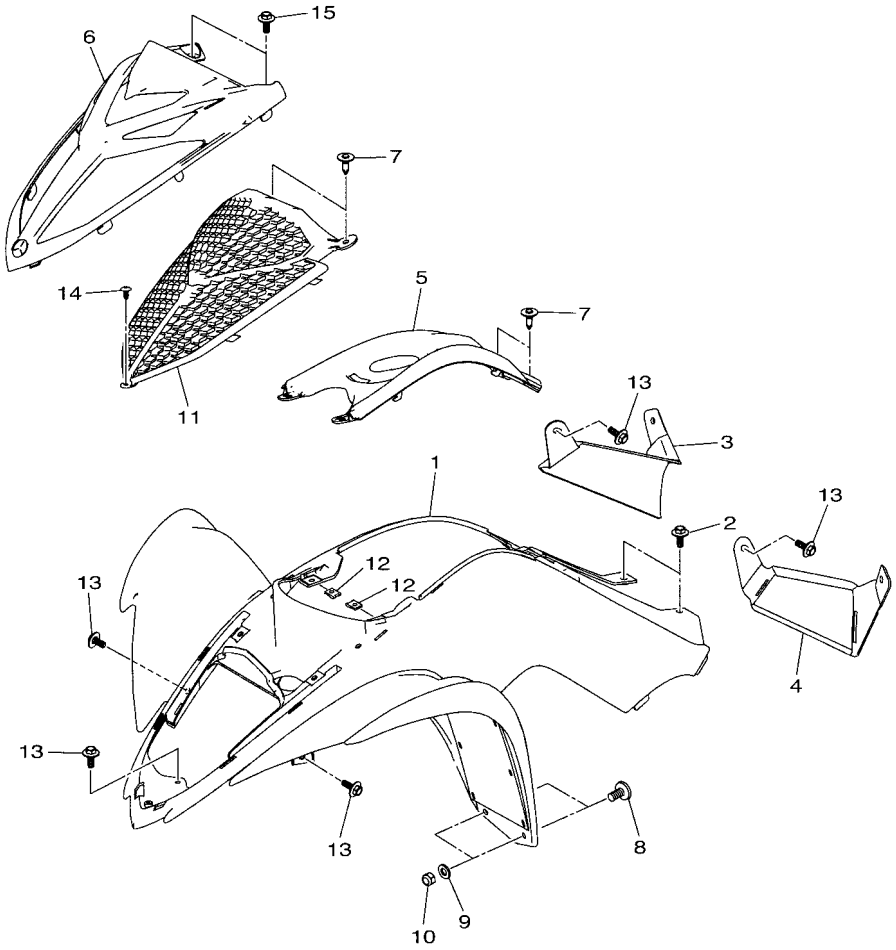

FWD

BD34110-S180

FIG. 18 FRONT FENDER

REF. NO.	PART NO.	DESCRIPTION	OCE	MEX				REMARKS
1	BD3–F1500–70	FRONT FENDER ASSY	1					UR FOR DPBSE
	BD3–F1500–80	FRONT FENDER ASSY		1				UR FOR DPBSE
	BD3–F1500–10	FRONT FENDER ASSY	1					UR FOR BWS1
	BD3–F1500–20	FRONT FENDER ASSY		1				UR FOR BWS1
2	BD3–F1738–00	BOLT	2	2				
3	BD3–F1721–00	COVER, SIDE 2	1	1				
4	BD3–F1711–00	COVER, SIDE 1	1	1				
5	BD3–F171A–20	COVER, TOP	1	1				UR FOR DPBSE
	BD3–F171A–10	COVER, TOP	1	1				UR FOR BWS1
6	BD3–F1556–20	FENDER, FRONT 2	1	1				UR FOR DPBSE
	BD3–F1556–10	FENDER, FRONT 2	1	1				UR FOR BWS1
7	BD3–F1728–00	RIVET	4	4				
8	BD3–F11C8–00	SCREW 4	4	4				
9	BD3–F2149–10	WASHER	4	4				
10	BD3–F4148–10	NUT, SPEED 3	4	4				
11	BD3–E2467–00	COVER, RADIATOR	1	1				
12	BD3–F4149–10	NUT	2	2				
13	BD3–F1632–10	BOLT 2	5	5				
14	BD3–F2969–10	SCREW, 1	1	1				
15	BD3–F3356–10	BOLT 2	2	2				

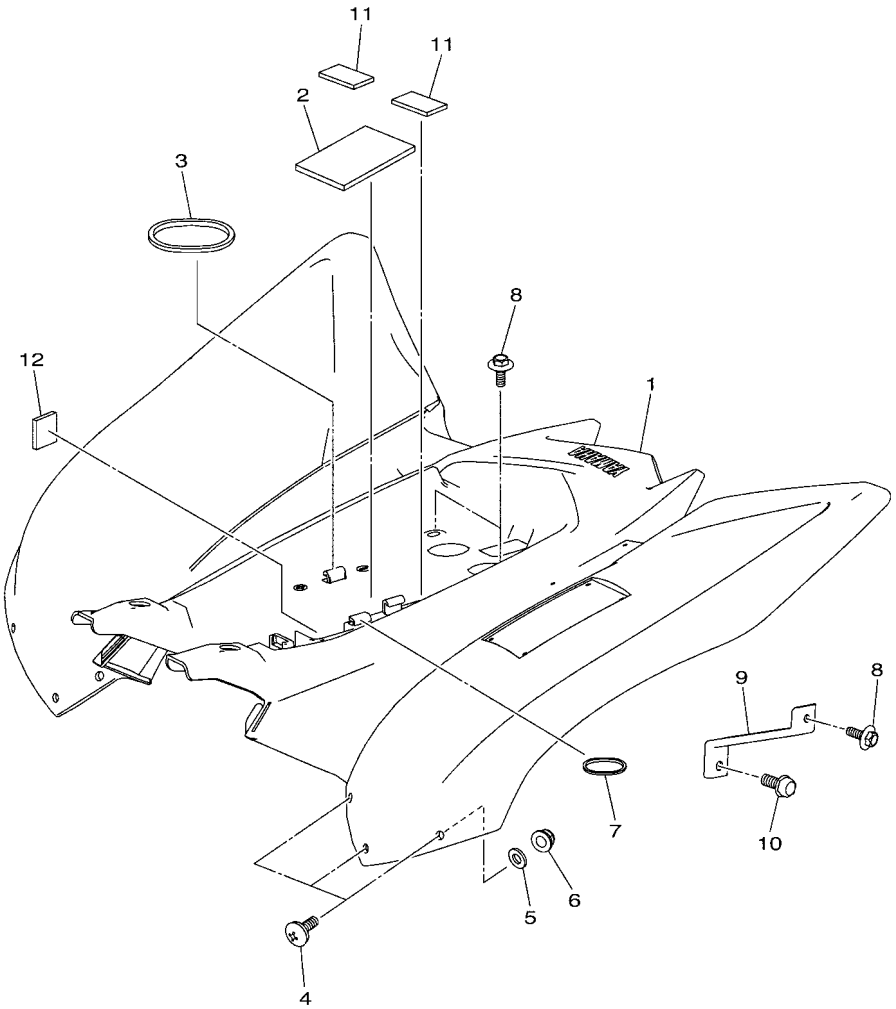

BD31110-R190

FIG. 19 REAR FENDER

REF. NO.	PART NO.	DESCRIPTION	OCE	MEX				REMARKS
1	BD3–F1600–40	REAR FENDER ASSY	1					UR FOR DPBSE
	BD3–F1600–50	REAR FENDER ASSY		1				UR FOR DPBSE
	BD3–F1600–A0	REAR FENDER ASSY	1					UR FOR BWS1
	BD3–F1600–B0	REAR FENDER ASSY		1				UR FOR BWS1
2	BD3–H2122–00	SEAT, BATTERY	1	1				
3	BD3–H2131–00	BAND, BATTERY	1	1				
4	BD3–F11C8–00	SCREW 4	6	6				
5	BD3–F2149–10	WASHER	6	6				
6	BD3–F4148–10	NUT, SPEED 3	6	6				
7	BD3–F1376–00	BAND, TOOL	1	1				
8	BD3–F1632–10	BOLT 2	4	4				
9	BD3–F1613–00	STAY, FENDER 1	2	2				
10	BD3–F4176–10	BOLT 1	2	2				
11	BD3–F1639–00	DAMPER 2	2	2				
12	BD3–F1649–00	DAMPER	1	1				

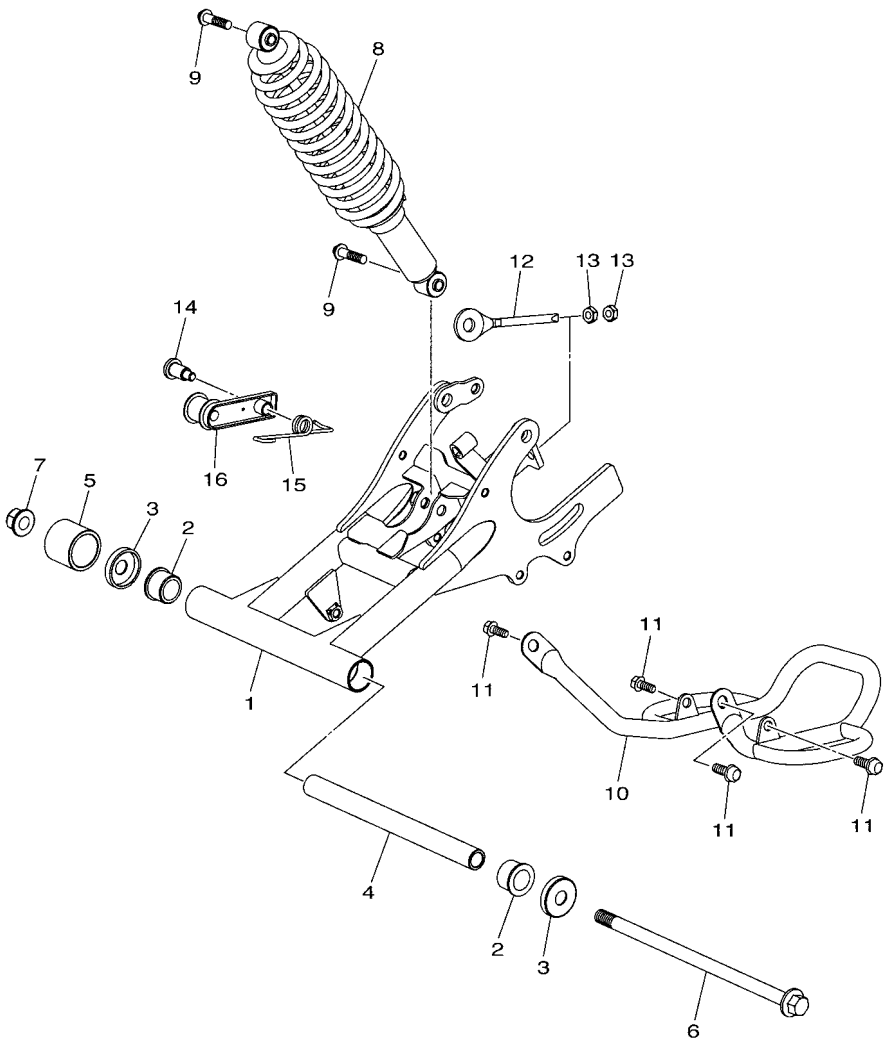

BD31110-R200

FIG. 20 REAR ARM

REF. NO.	PART NO.	DESCRIPTION	OCE	MEX				REMARKS
1	BD3–F2110–00	REAR ARM COMP.	1	1				
2	BD3–F2123–00	BUSH 1	2	2				
3	BD3–F2128–00	COVER, THRUST 1	2	2				
4	BD3–F2126–00	COLLAR, DISTANCE	1	1				
5	BD3–F2151–00	SEAL, GUARD	1	1				
6	BD3–F1722–10	BOLT 2	1	1				
7	BD3–F1535–10	NUT 1	1	1				
8	BD3–F2210–00	SHOCK ABSORBER ASSY, REAR	1	1				
9	BD3–F4834–10	BOLT	2	2				
10	BD3–F2361–00	GUARD 1	1	1				
11	BD3–F3876–10	BOLT	4	4				
12	BD3–F5388–10	PULLER, CHAIN 1	1	1				
13	BD3–F1536–10	NUT 2	2	2				
14	BD3–F3769–10	BOLT	1	1				
15	BD3–F2169–00	SPRING, TENSIONER	1	1				
16	BD3–F2183–10	BRACKET, TENSIONER	1	1				

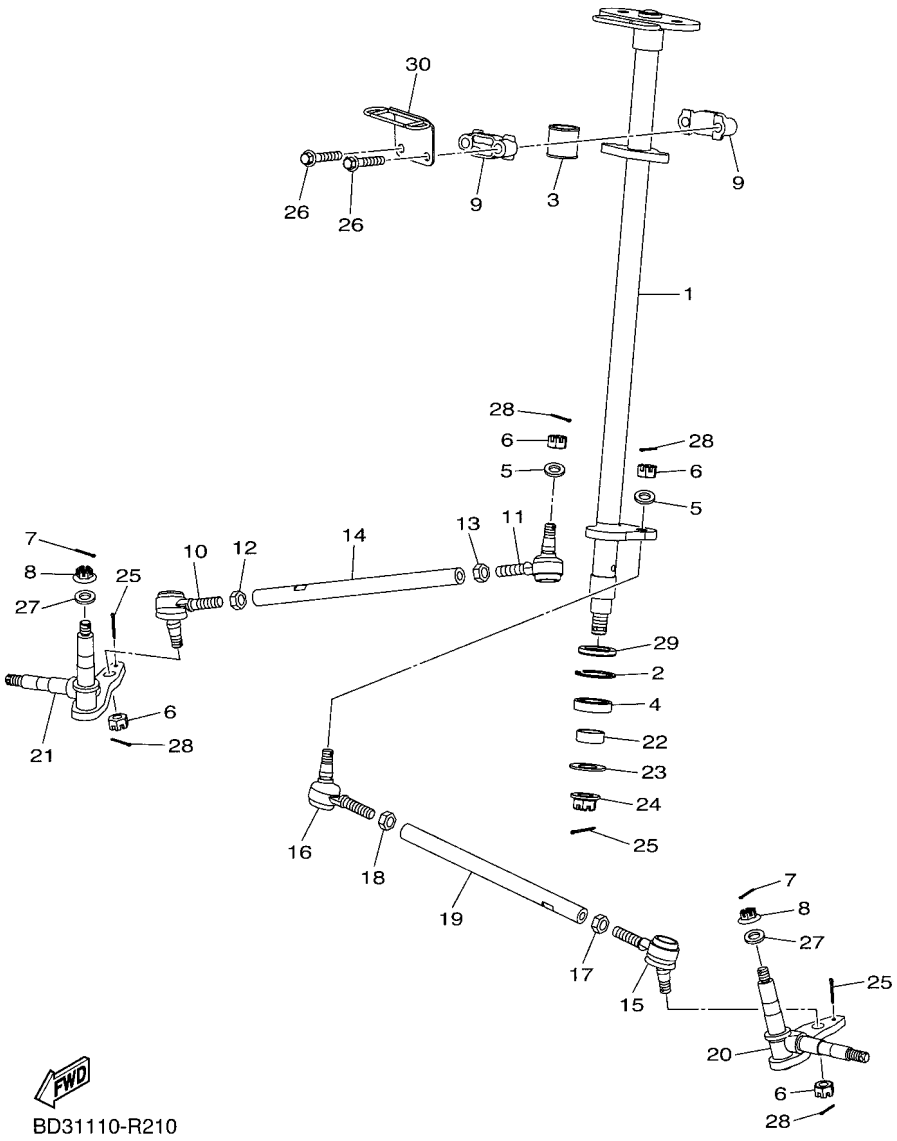

FIG. 21 STEERING

REF. NO.	PART NO.	DESCRIPTION	OCE	MEX				REMARKS
1	BD3–F3813–00	COLUMN, STEERING 2	1	1				
2	BD3–F384N–00	CLIP, RING	1	1				
3	BD3–F3818–00	COVER, STEERING	1	1				
4	BD3–F3812–00	BEARING, STEERING	1	1				
5	BD3–F3427–00	WASHER	2	2				
6	BD3–F3856–10	NUT	4	4				
7	BD3–F146E–10	PIN 2	2	2				
8	BD3–F3877–10	NUT	2	2				
9	BD3–F3872–00	HOLDER, BEARING	2	2				
10	BD3–F3841–10	JOINT, UNIVERSAL 1	1	1				
11	BD3–F3845–10	JOINT, UNIVERSAL 2	1	1				
12	BD3–F1791–10	NUT	1	1				
13	BD3–F1829–10	NUT	1	1				
14	BD3–F3831–10	ROD, TIE	1	1				
15	BD3–F3841–10	JOINT, UNIVERSAL 1	1	1				
16	BD3–F3845–10	JOINT, UNIVERSAL 2	1	1				
17	BD3–F1791–10	NUT	1	1				
18	BD3–F1829–10	NUT	1	1				
19	BD3–F3831–10	ROD, TIE	1	1				
20	BD3–F3511–00	KNUCKLE, STEERING 1	1	1				
21	BD3–F3521–00	KNUCKLE, STEERING 2	1	1				
22	BD3–F38B2–10	SPACER	1	1				
23	BD3–F3165–00	WASHER, FELT	1	1				
24	BD3–F4531–10	NUT	1	1				
25	BD3–F112N–10	PIN	3	3				
26	BD3–F4177–10	BOLT 2	2	2				
27	BD3–F2246–00	WASHER 4	2	2				

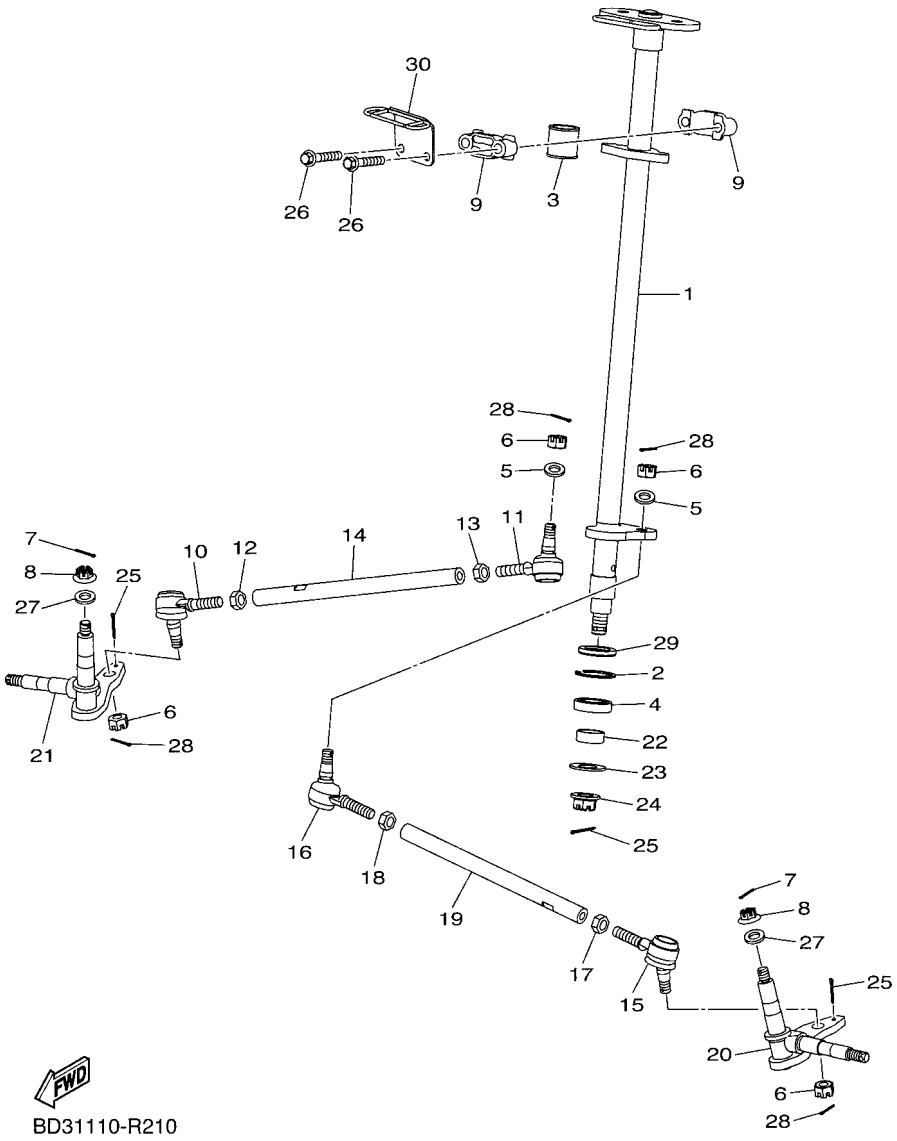

FIG. 21 STEERING

REF. NO.	PART NO.	DESCRIPTION	OCE	MEX				REMARKS
28	BD3–F4374–10	PIN	4	4				
29	BD3–F3844–00	SEAL	1	1				
30	BD3–F3868–00	BRACKET, STEERING LOWER	1	1				

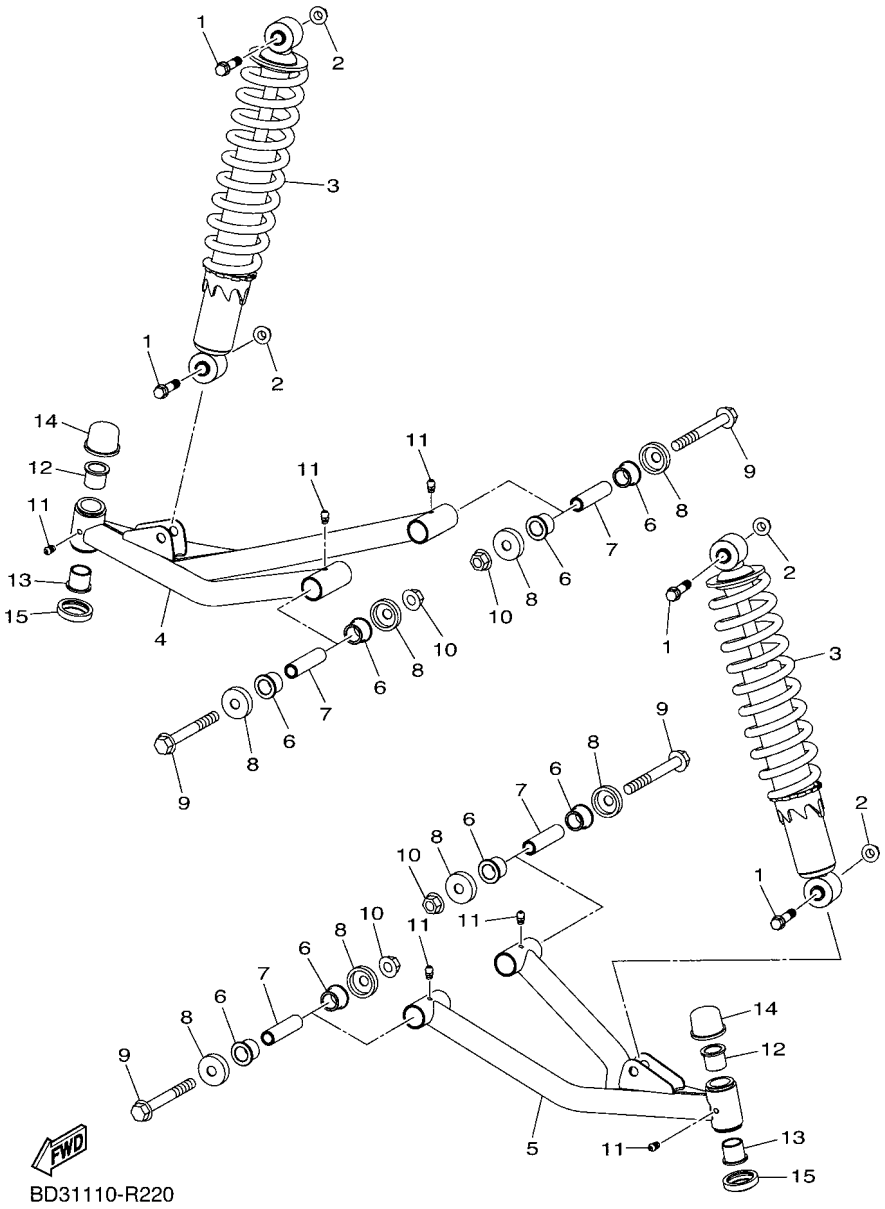

FIG. 22 FRONT SUSPENSION & WHEEL

REF. NO.	PART NO.	DESCRIPTION	OCE	MEX				REMARKS
1	BD3–F4834–10	BOLT	4	4				
2	BD3–F3834–10	NUT 2	4	4				
3	BD3–F3350–10	SHOCK ABSORBER ASSY	2	2				
4	BD3–F3580–00	FRONT LOWER ARM COMP. (RIGHT)	1	1				
5	BD3–F3570–00	FRONT LOWER ARM COMP. (LEFT)	1	1				
6	BD3–F3526–00	BUSH	8	8				
7	BD3–F3364–00	COLLAR 2	4	4				
8	BD3–F3517–00	COVER, THRUST 1	8	8				
9	BD3–F7117–10	BOLT, MAIN STAND	4	4				
10	BD3–F3834–10	NUT 2	4	4				
11	BD3–F135J–10	NIPPLE	6	6				
12	BD3–F639L–00	BUSH 1	2	2				
13	BD3–F639M–00	BUSH 2	2	2				
14	BD3–F2129–00	COVER, THRUST 2	2	2				
15	BD3–F3527–00	SEAL, DUST 1	2	2				

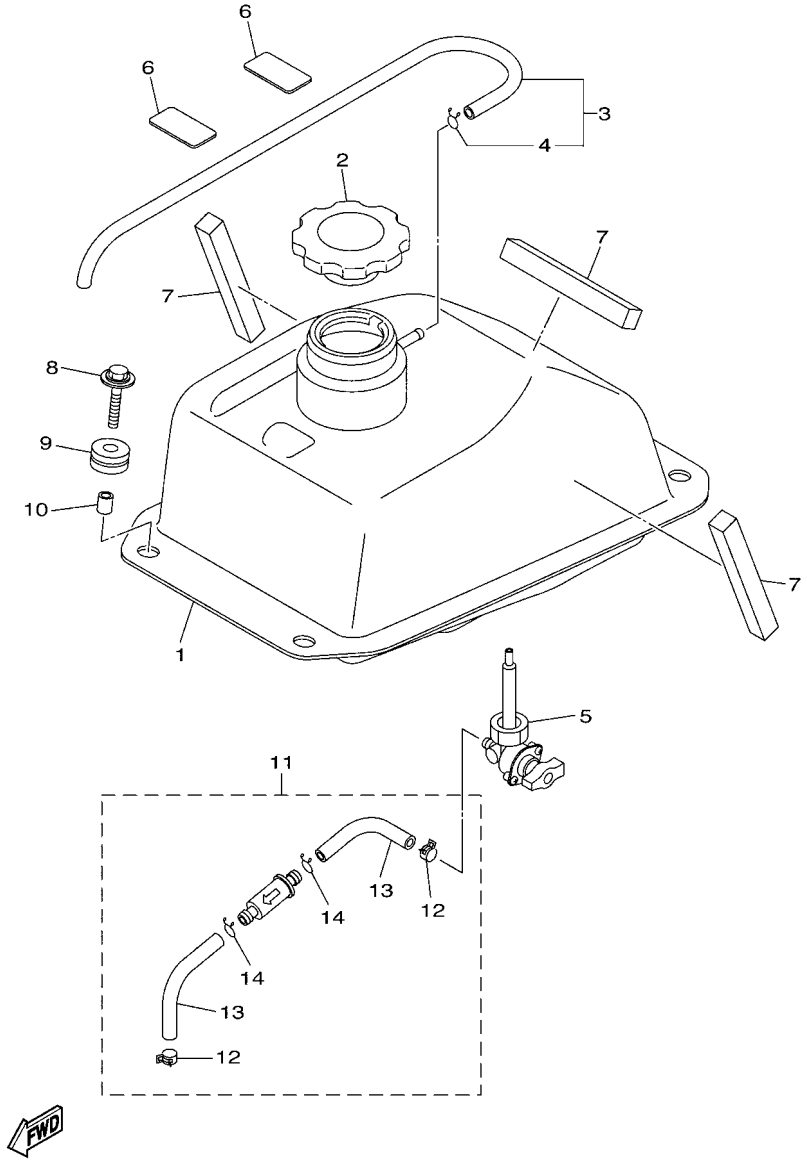

BD31110-R230

FIG. 23 FUEL TANK

REF. NO.	PART NO.	DESCRIPTION	OCE	MEX				REMARKS
1	BD3–F4110–00	FUEL TANK COMP.	1	1				
2	BD3–F4610–10	CAP ASSY	1	1				
3	BD3–F318J–10	HOSE ASSY	1	1				
4	BD3–F3447–10	.CLIP	1	1				
5	BD3–F4500–00	FUEL COCK ASSY 1	1	1				
6	BD3–F1566–00	TAPE, 1	2	2				
7	BD3–F4181–00	DAMPER, LOCATING 1	3	3				
8	BD3–F3492–10	BOLT	4	4				
9	BD3–F4339–00	GROMMET	4	4				
10	BD3–F412G–10	COLLAR	4	4				
11	BD3–F4560–10	FILTER ASSY	1	1				
12	BD3–F4366–00	.CLAMP, FUEL PIPE 1	2	2				
13	BD3–F4864–00	.TUBE	2	2				
14	BD3–F411M–10	.CLIP	2	2				

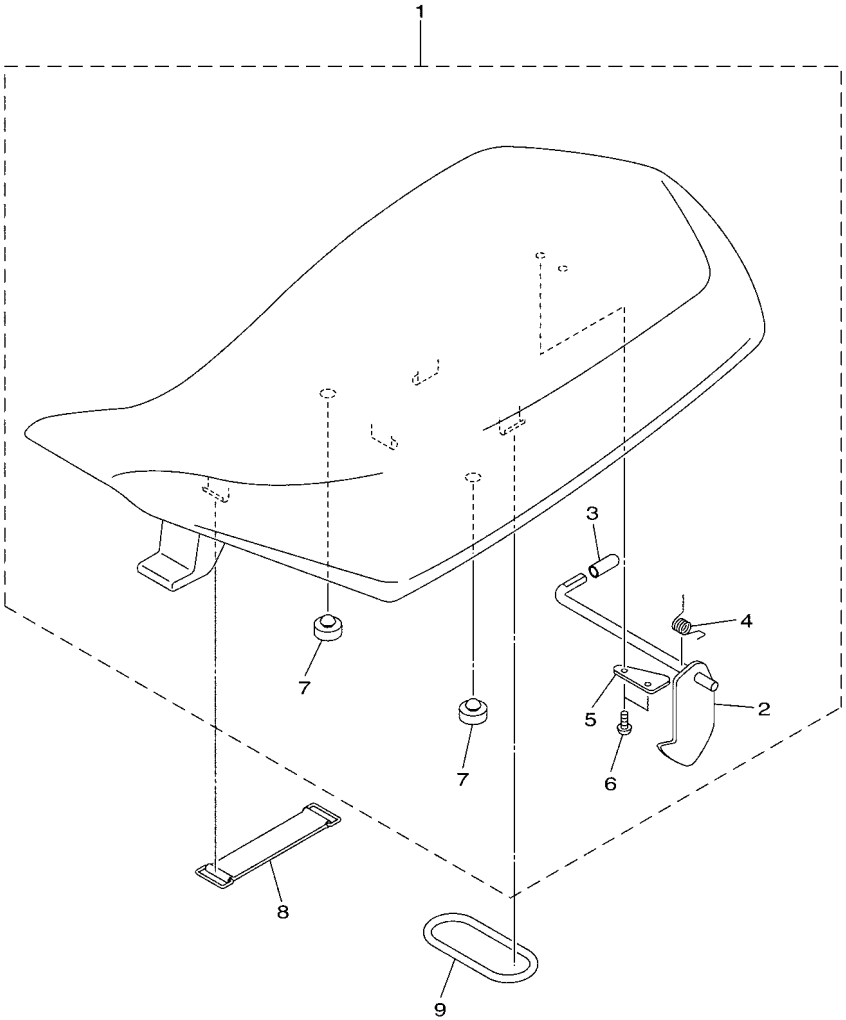

BD31110-R240

FIG. 24 SEAT

REF. NO.	PART NO.	DESCRIPTION	OCE	MEX				REMARKS
1	BD3–F4710–10	SINGLE SEAT ASSY	1	1				
2	BD3–F4760–10	.SEAT LEVER ASSY	1	1				
3	BD3–F476M–00	.CAP	1	1				
4	BD3–F4758–10	.SPRING	1	1				
5	BD3–F4775–10	.BRACKET, SEAT LEVER	1	1				
6	BD3–F11C5–10	.SCREW 1	2	2				
7	BD3–F7114–00	.STOPPER, MAIN STAND	2	2				
8	BD3–F4398–00	BAND 1	1	1				
9	BD3–F4648–00	O-RING	1	1				

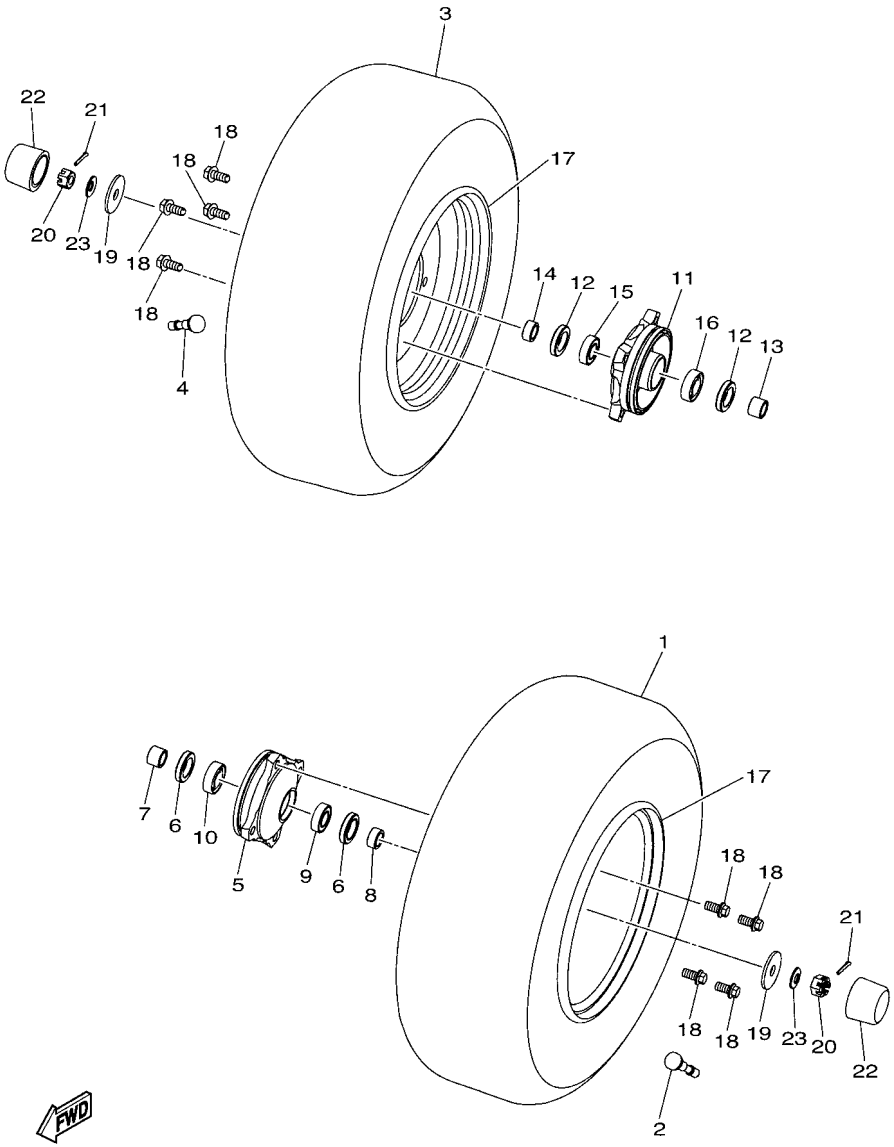

BD31110-R250

FIG. 25 FRONT WHEEL

REF. NO.	PART NO.	DESCRIPTION	OCE	MEX				REMARKS
1	BD3–F510S–00	TIRE	1	1				
2	BD3–F5170–00	AIR VALVE ASSY	1	1				
3	BD3–F510S–00	TIRE	1	1				
4	BD3–F5170–00	AIR VALVE ASSY	1	1				
5	BD3–F5111–10	HUB, FRONT	1	1				
6	BD3–F511B–00	SEAL, OIL	2	2				
7	BD3–F5117–10	SPACER, BEARING	1	1				
8	BD3–F5105–10	SPACER	1	1				
9	BD3–F51H1–10	BEARING	1	1				
10	BD3–F51H2–10	BEARING 2	1	1				
11	BD3–F5111–10	HUB, FRONT	1	1				
12	BD3–F511B–00	SEAL, OIL	2	2				
13	BD3–F5117–10	SPACER, BEARING	1	1				
14	BD3–F5105–10	SPACER	1	1				
15	BD3–F51H1–10	BEARING	1	1				
16	BD3–F51H2–10	BEARING 2	1	1				
17	BD3–F5180–00	WHEEL COMP.	2	2				
18	BD3–F4592–10	BOLT	8	8				
19	BD3–F2245–10	WASHER 3	2	2				
20	BD3–F1293–10	NUT	2	2				
21	BD3–F112N–10	PIN	2	2				
22	BD3–F512A–00	CAP, WHEEL	2	2				
23	BD3–F3457–00	WASHER	2	2				

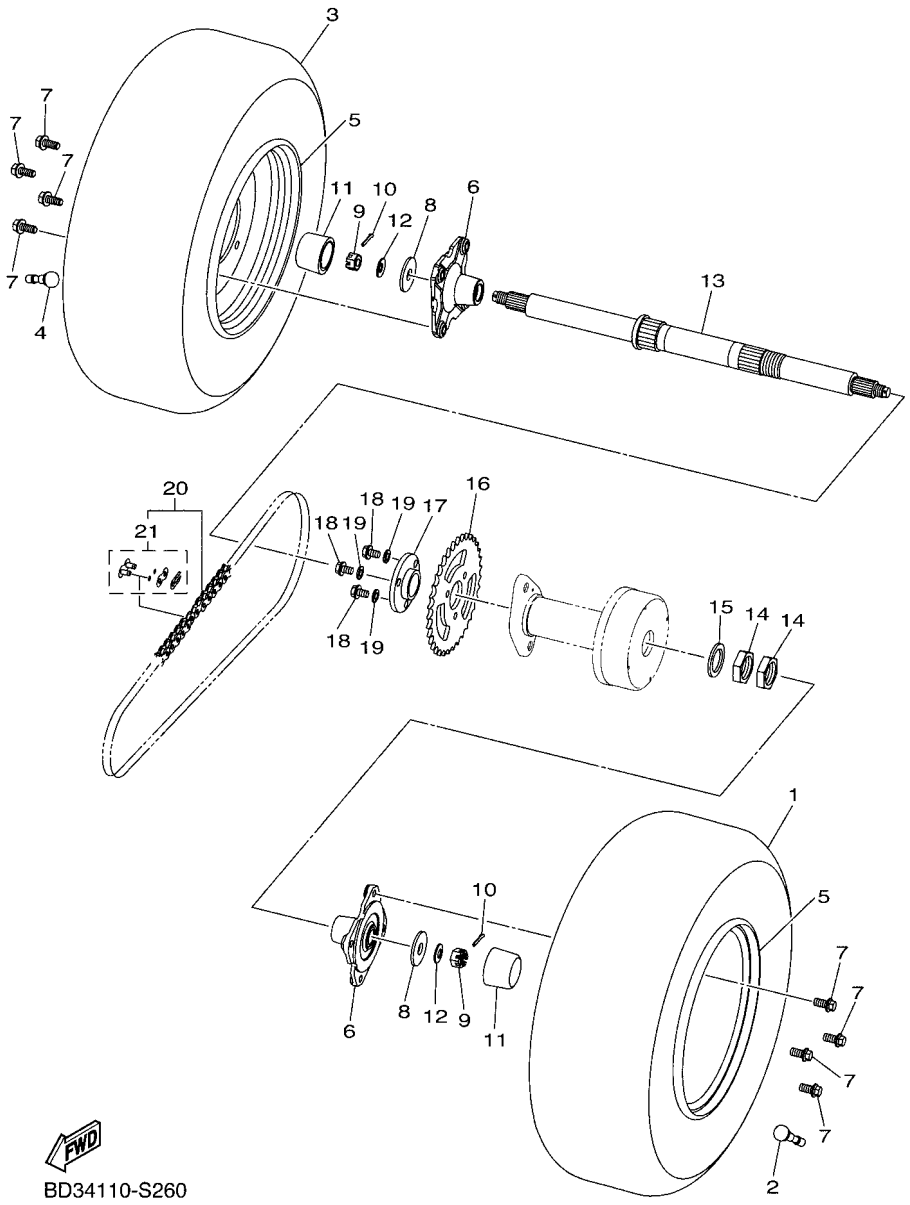

FIG. 26 REAR AXLE & WHEEL

REF. NO.	PART NO.	DESCRIPTION	OCE	MEX				REMARKS
1	BD3–F53P3–00	TIRE	1	1				
2	BD3–F5170–00	AIR VALVE ASSY	1	1				
3	BD3–F53P3–00	TIRE	1	1				
4	BD3–F5170–00	AIR VALVE ASSY	1	1				
5	BD3–F5180–00	WHEEL COMP.	2	2				
6	BD3–F5377–10	COLLAR, WHEEL	2	2				
7	BD3–F4592–10	BOLT	8	8				
8	BD3–F2243–10	WASHER 1	2	2				
9	BD3–F5382–10	NUT, AXLE	2	2				
10	BD3–F112N–10	PIN	2	2				
11	BD3–F512A–00	CAP, WHEEL	2	2				
12	BD3–F2159–00	WASHER, SPRING LOWER	2	2				
13	BD3–F5381–10	AXLE, WHEEL	1	1				
14	BD3–F1636–10	NUT	2	2				
15	BD3–F3737–00	WASHER 1	1	1				
16	BD3–F5438–00	SPROCKET, DRIVEN (38T)	1	1				
17	BD3–F5386–00	COLLAR, SPROCKET AXLE	1	1				
18	BW4–F3459–00	BOLT	3	3				
19	BD3–F2156–10	WASHER, PLATE	3	3				
20	BD3–F53C0–10	CHAIN	1	1				
21	BD3–E6548–10	.JOINT, CHAIN	1	1				

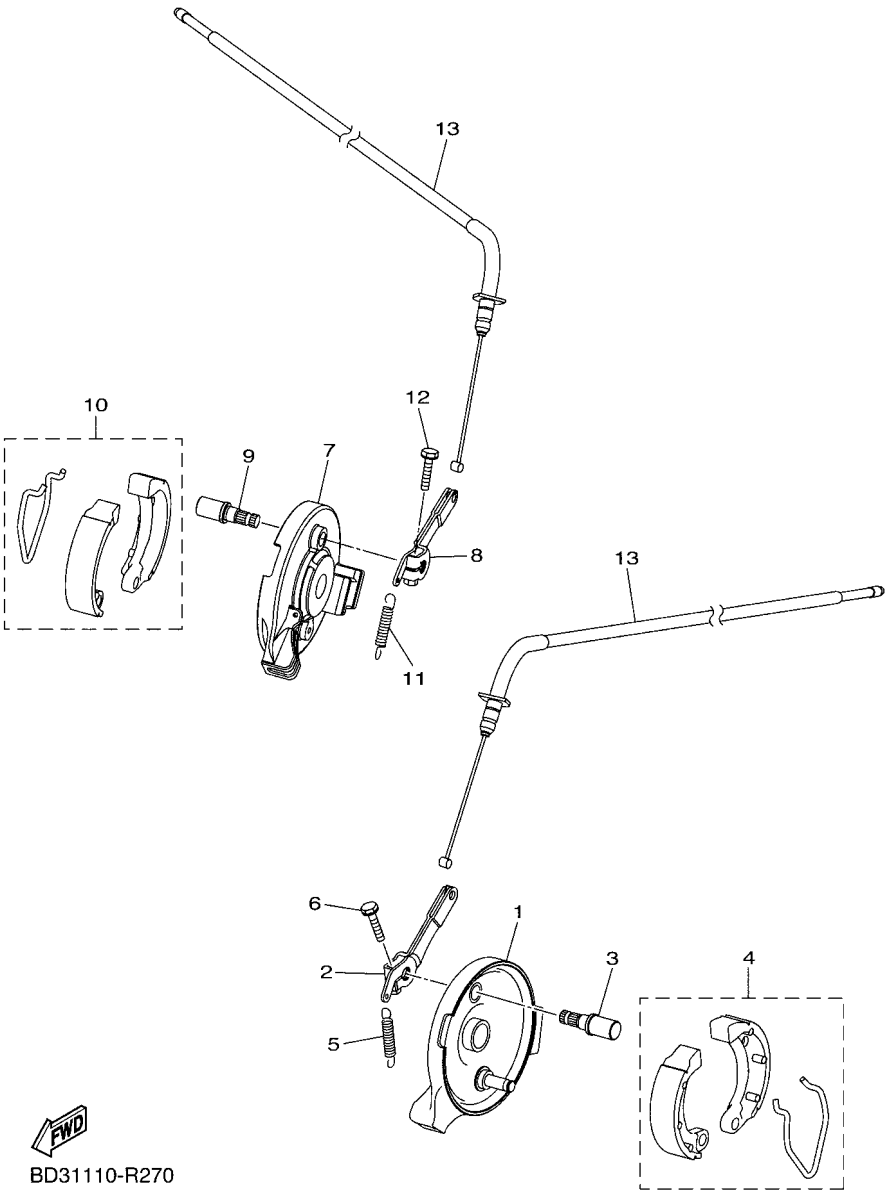

FIG. 27 FRONT BRAKE

REF. NO.	PART NO.	DESCRIPTION	OCE	MEX				REMARKS
1	BD3–F5121–20	PLATE, BRAKE SHOE	1	1				
2	BD3–F5155–20	LEVER, CAMSHAFT 1	1	1				
3	BD3–F5151–20	CAMSHAFT	1	1				
4	BD3–F510L–40	BRAKE SHOE COMP.	1	1				
5	BD3–F5143–20	SPRING, RETURN	1	1				
6	BD3–F2241–10	BOLT 1	1	1				
7	BD3–F5169–20	PLATE, BRAKE SHOE 2	1	1				
8	BD3–F5156–20	LEVER, CAMSHAFT 2	1	1				
9	BD3–F5151–20	CAMSHAFT	1	1				
10	BD3–F510L–40	BRAKE SHOE COMP.	1	1				
11	BD3–F5143–20	SPRING, RETURN	1	1				
12	BD3–F2241–10	BOLT 1	1	1				
13	BD3–F6350–10	CABLE, BRAKE	2	2				

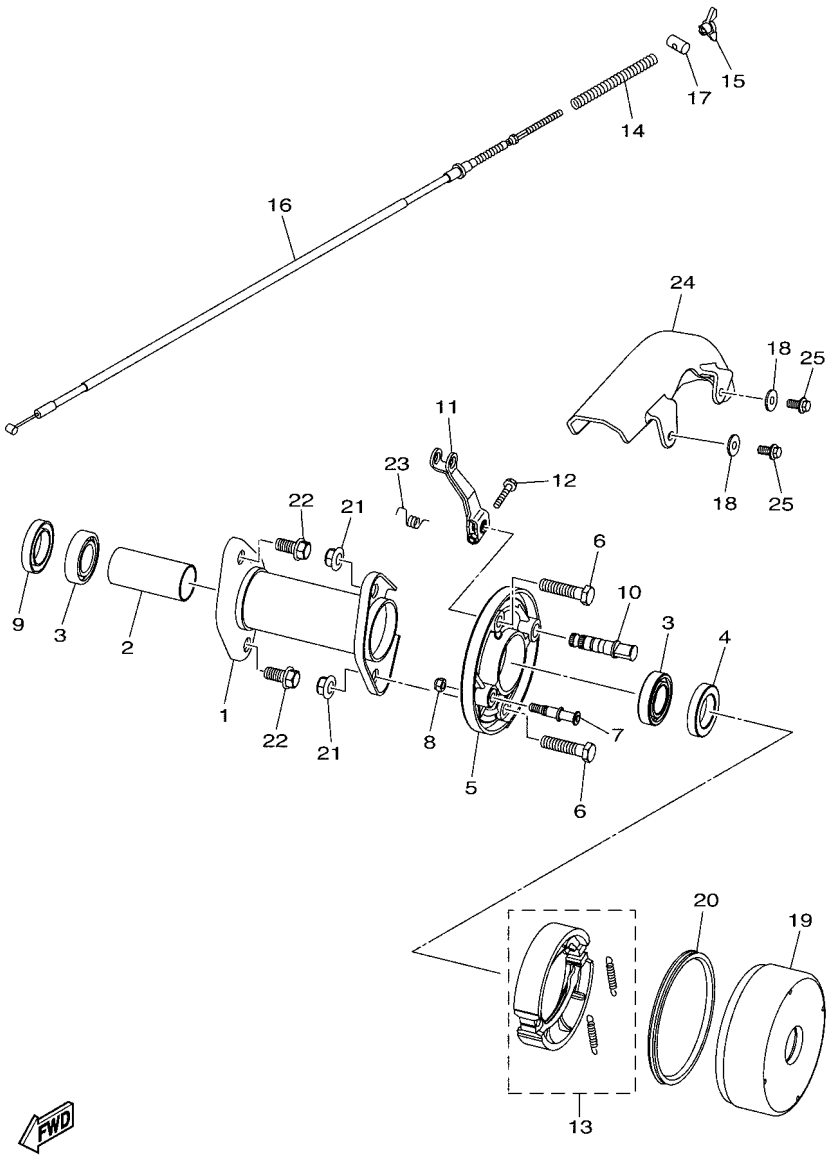

BD34110-S280

FIG. 28 REAR BRAKE

REF. NO.	PART NO.	DESCRIPTION	OCE	MEX				REMARKS
1	BD3–F5311–00	HUB, REAR	1	1				
2	BD3–F5317–10	SPACER, BEARING	1	1				
3	BD3–F53N4–00	BEARING	2	2				
4	BD3–F537Y–00	SEAL, DUST	1	1				
5	BD3–F5321–00	PLATE, BRAKE SHOE	1	1				
6	BD3–F7217–10	BOLT	2	2				
7	BD3–F518E–10	SHAFT	1	1				
8	BD3–F2143–10	NUT	1	1				
9	BD3–F5319–00	SEAL, HUB DUST	1	1				
10	BD3–F5351–00	CAMSHAFT	1	1				
11	BD3–F5355–10	LEVER, CAMSHAFT	1	1				
12	BD3–F3767–10	BOLT	1	1				
13	BD3–F530K–20	BRAKE SHOE SET	1	1				
14	BD3–F6304–10	SPRING	1	1				
15	BD3–F6343–10	NUT, ADJUSTING	1	1				
16	BD3–F6341–10	WIRE, BRAKE 1	1	1				
17	BD3–F7438–10	PIN, CLEVIS	1	1				
18	BD3–F3458–10	WASHER	2	2				
19	BD3–F531E–20	DRUM, BRAKE	1	1				
20	BD3–F5336–00	RING 2	1	1				
21	BD3–F4477–10	NUT	2	2				
22	BD3–F8374–10	BOLT, COWLING	2	2				
23	BD3–F5333–10	SPRING, RETURN	1	1				
24	BD3–F2312–00	CASE, CHAIN 2	1	1				
25	BD3–F7416–10	BOLT, FOOTREST	2	2				

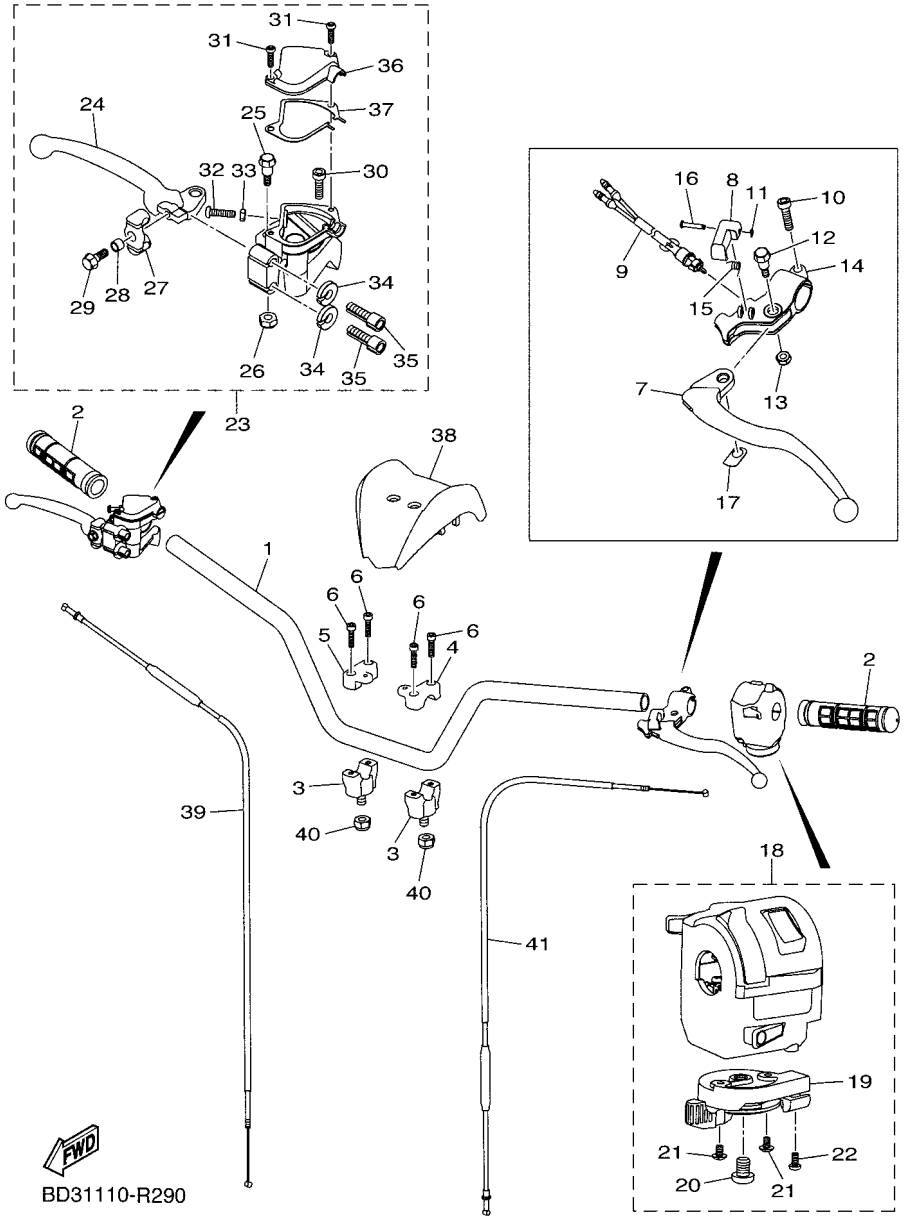

FIG. 29 STEERING HANDLE & CABLE

REF. NO.	PART NO.	DESCRIPTION	OCE	MEX				REMARKS
1	BD3–F6111–00	HANDLEBAR	1	1				
2	BD3–F6241–10	GRIP	2	2				
3	BD3–F3442–00	HOLDER, HANDLE LOWER	2	2				
4	BD3–F3441–00	HOLDER, HANDLE UPPER	1	1				
5	BD3–F344A–00	HOLDER, HANDLE UPPER 1	1	1				
6	BD3–F7434–10	BOLT	4	4				
7	BD3–H3912–00	LEVER 1	1	1				
8	BD3–H3965–00	LEVER, LOCK	1	1				
9	BD3–H2550–00	ENGINE STOP SWITCH ASSY	1	1				
10	BD3–F3471–00	BOLT	1	1				
11	BD3–F6466–00	RING, SNAP	1	1				
12	BD3–F2277–00	BOLT	1	1				
13	BD3–F3833–00	NUT 1	1	1				
14	BD3–H2911–10	HOLDER, LEVER 1	1	1				
15	BD3–H3966–00	SPRING, RETURN	1	1				
16	BD3–H3967–00	PIN, LOCK 1	1	1				
17	BD3–F3444–00	WASHER	1	1				
18	BD3–H3975–00	SWITCH, HANDLE 2	1	1				
19	BD3–H3941–00	.LEVER, STARTER	1	1				
20	BD3–F3753–00	.BOLT	1	1				
21	BD3–F1531–00	.BOLT	2	2				
22	BD3–F1532–00	.BOLT 2	1	1				
23	BD3–F6250–00	THROTTLE LEVER ASSY	1	1				
24	BD3–H3922–00	.LEVER 2	1	1				
25	BD3–F1739–00	.BOLT	1	1				
26	BD3–F3833–00	.NUT 1	1	1				
27	BD3–F6347–00	.JOINT, CABLE	1	1				

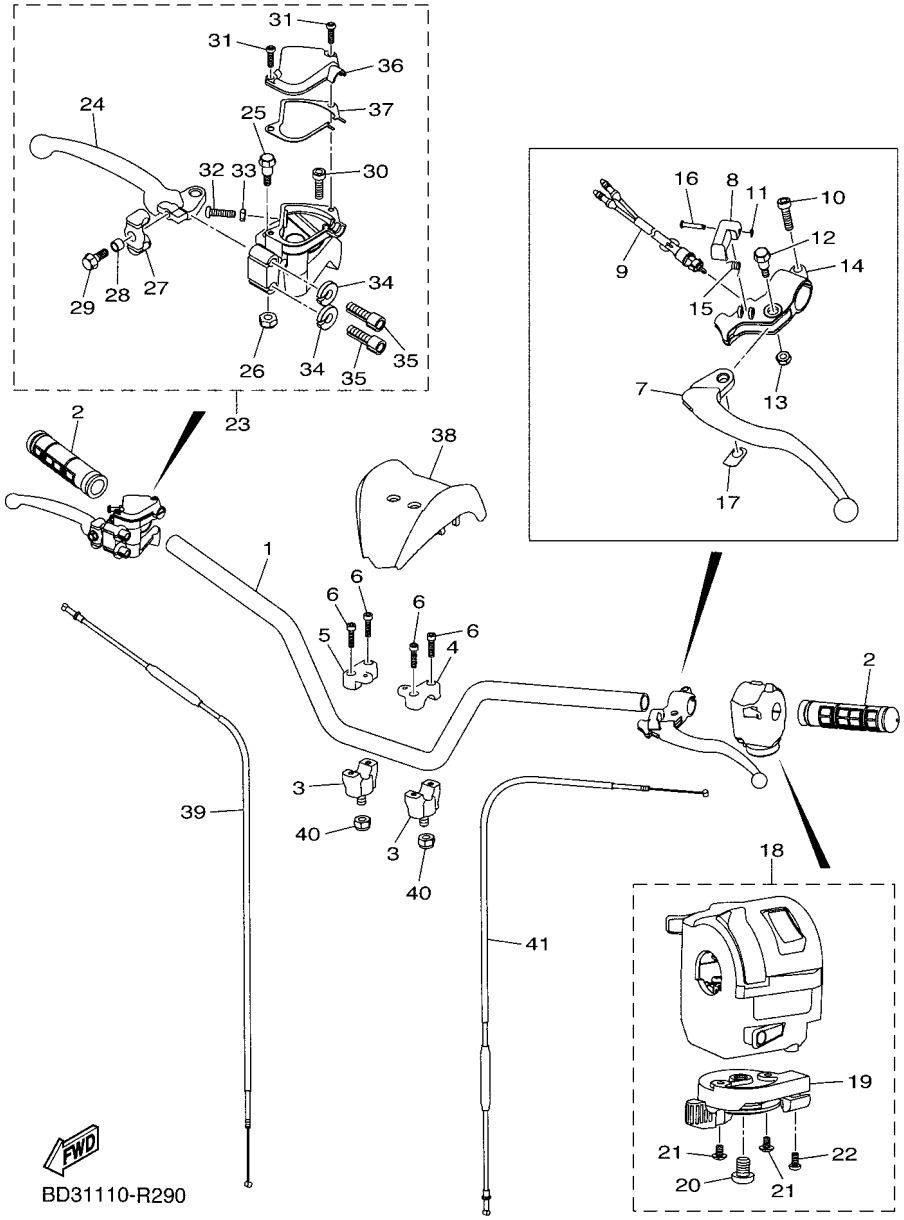

FIG. 29 STEERING HANDLE & CABLE

REF. NO.	PART NO.	DESCRIPTION	OCE	MEX				REMARKS
28	BD3–F7213–00	.COLLAR	1	1				
29	BD3–F6382–00	.BOLT, AJUSTING	1	1				
30	BD3–F3471–00	.BOLT	1	1				
31	BD3–H1145–00	.SCREW 1	2	2				
32	BD3–F6337–00	.BOLT, ADJUSTING	1	1				
33	BD3–F3357–00	.NUT	1	1				
34	BD3–F1968–00	.NUT	2	2				
35	BD3–F3346–00	.BOLT 1	2	2				
36	BD3–F628F–00	.CAP, GEAR	1	1				
37	BD3–F628G–00	.GASKET	1	1				
38	BD3–F6124–00	PROTECTOR, HANDLEBAR	1	1				
39	BD3–F6311–10	CABLE, THROTTLE 1	1	1				
40	BD3–F2252–10	NUT	2	2				
41	BD3–F6331–10	CABLE, STARTER 1	1	1				

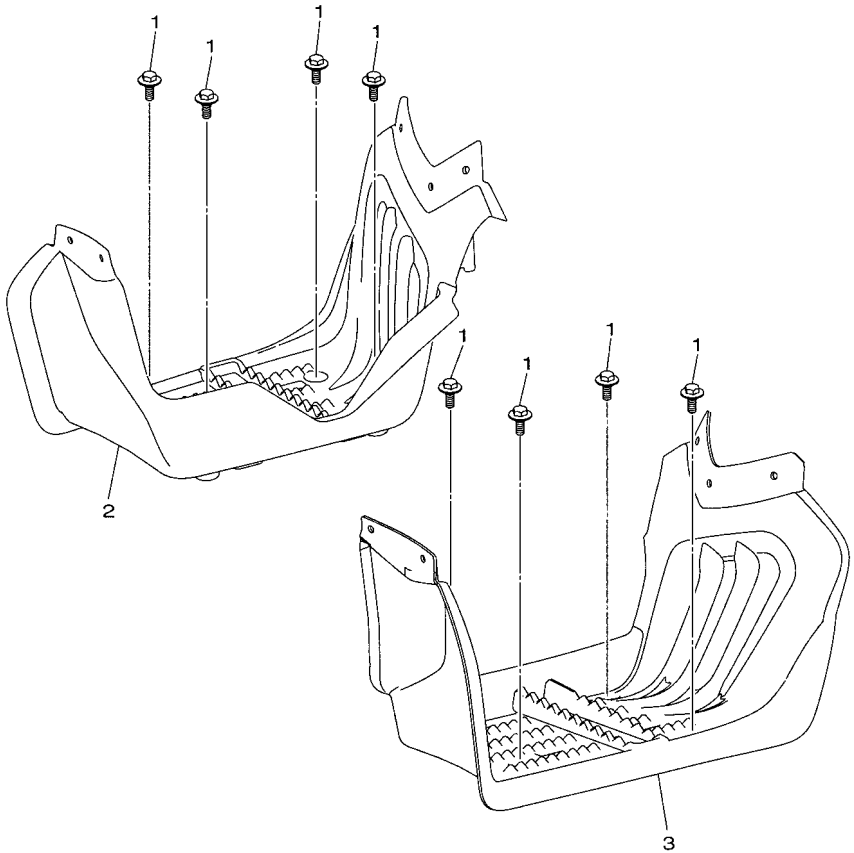

FWD

BD31110-R300

FIG. 30 STAND & FOOTREST

REF. NO.	PART NO.	DESCRIPTION	OCE	MEX				REMARKS
1	BD3–F1632–10	BOLT 2	8	8				
2	BD3–F7463–00	COVER 2	1	1				
3	BD3–F7453–00	COVER 1	1	1				

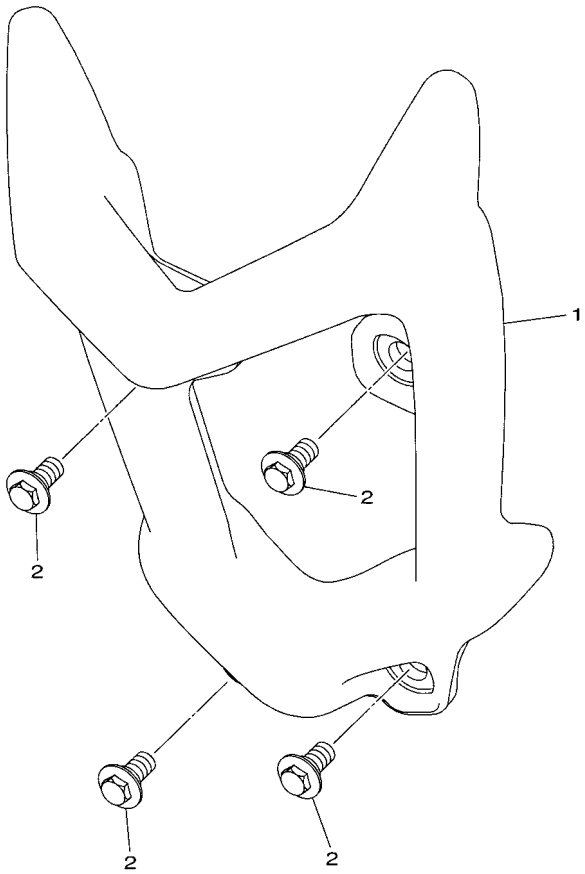

BD31110-R310

FIG. 31 GUARD

REF. NO.	PART NO.	DESCRIPTION	OCE	MEX				REMARKS
1	BD3–F845N–00	BAR, CARRY FRONT	1	1				
2	BD3–F2125–10	BOLT	4	4				

FIG. 32 GENERATOR

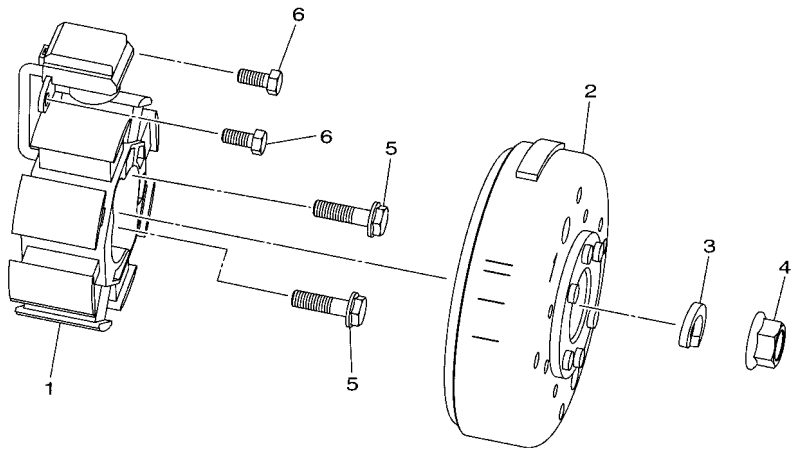

BD31110-R320

REF. NO.	PART NO.	DESCRIPTION	OCE	MEX				REMARKS
1	BD3–H1410–00	STATOR ASSY	1	1				
2	BD3–H1450–00	ROTOR ASSY	1	1				
3	BD3–H1554–10	WASHER	1	1				
4	BD3–H1353–10	NUT	1	1				
5	BD3–E2157–10	BOLT	2	2				
6	BD3–H1352–10	BOLT	2	2				

FIG. 33 STARTING MOTOR

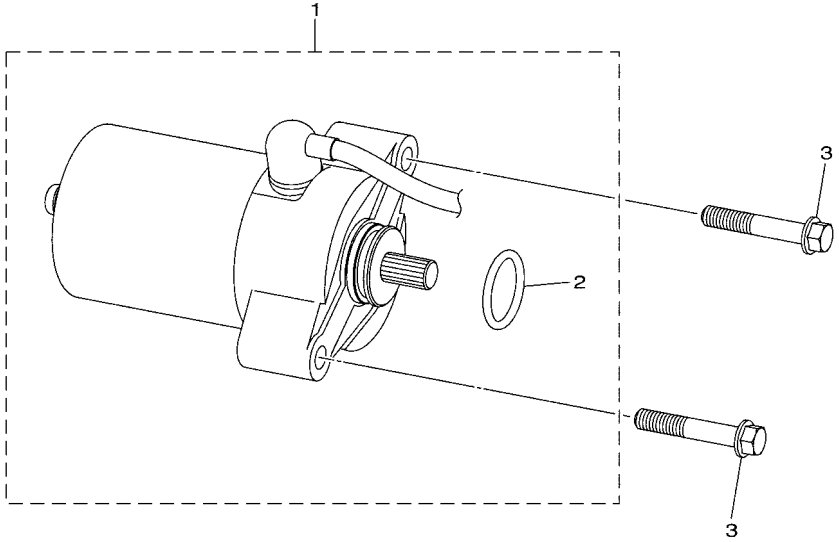

BD34110-S330

REF. NO.	PART NO.	DESCRIPTION	OCE	MEX				REMARKS
1	BD3–H1800–10	STARTING MOTOR ASSY	1	1				
2	BD3–H1168–00	.O-RING	1	1				
3	BD3–H1152–10	BOLT	2	2				

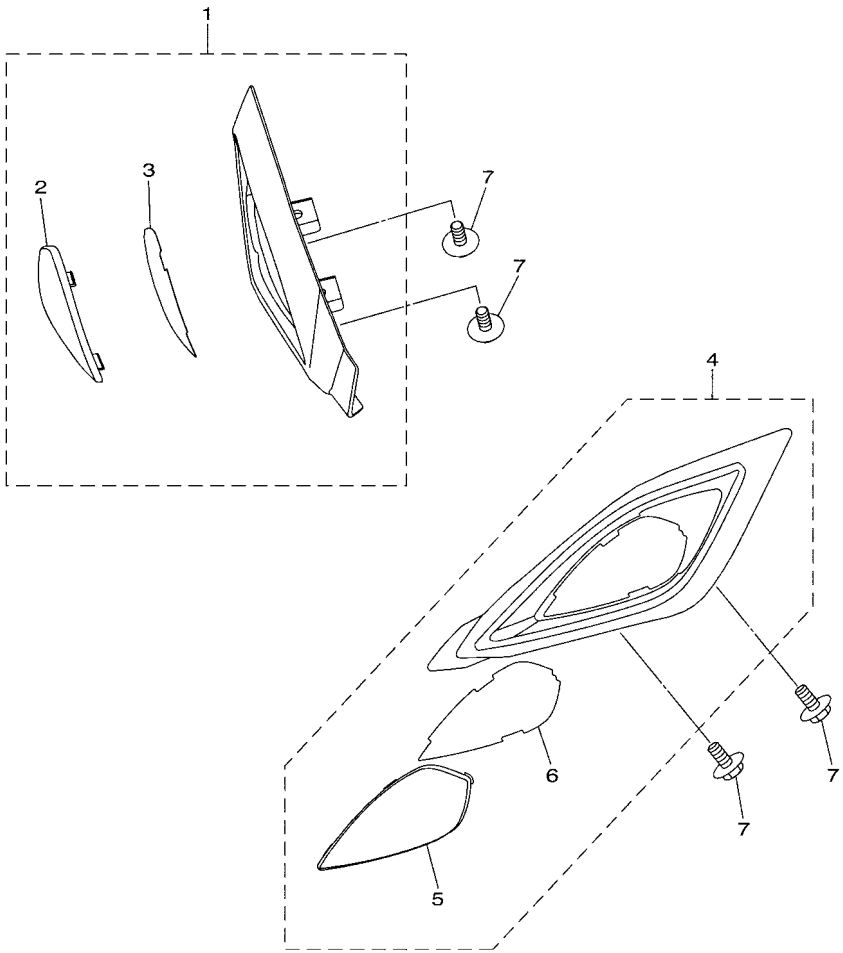

BD31110-R340

FIG. 34 HEADLIGHT

REF. NO.	PART NO.	DESCRIPTION	OCE	MEX				REMARKS
1	BD3–H4160–00	HEAD LIGHT ASSY 2	1	1				
2	BD3–H4121–00	.LENS, HEADLIGHT	1	1				
3	BD3–H4191–00	.GRAPHIC 2	1	1				
4	BD3–H4300–00	HEADLIGHT ASSY	1	1				
5	BD3–H4733–00	.LENS 1	1	1				
6	BD3–H411B–00	.GRAPHIC	1	1				
7	BD3–F1631–10	BOLT 1	4	4				

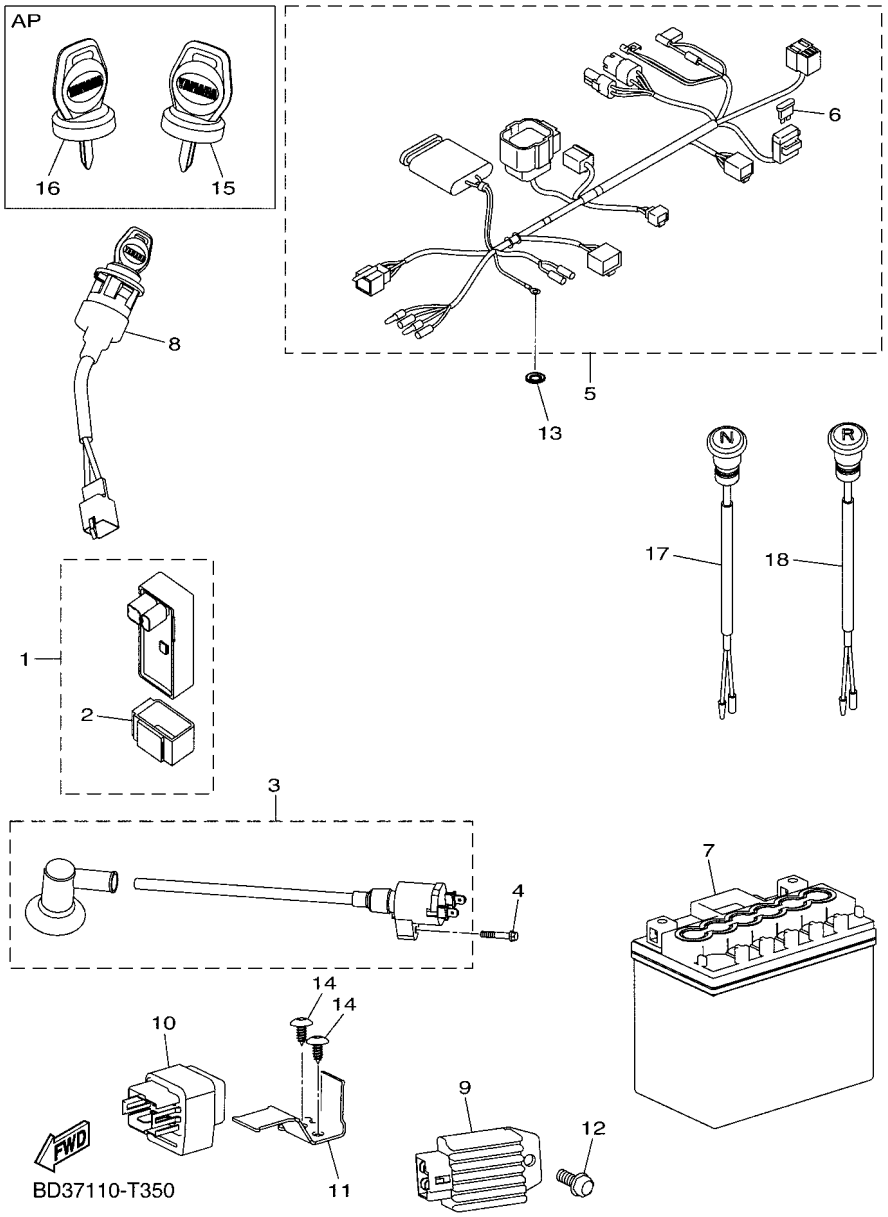

FIG. 35 ELECTRICAL 1

REF. NO.	PART NO.	DESCRIPTION	OCE	MEX				REMARKS
1	BD3–H5504–00	C.D.I. UNIT ASSY	1	1				
2	BD3–H5546–00	.BAND	1	1				
3	BD3–H2320–00	IGNITION COIL ASSY	1	1				
4	BD3–F7435–10	BOLT	1	1				
5	BD3–H2590–10	WIRE HARNESS ASSY	1	1				
6	BD3–H2151–00	.FUSE	1	1				
7	BD3–H2100–00	BATTERY ASSY (GTX5L-BS)	1	1				
8	BD3–H2510–10	MAIN SWITCH ASSY	1	1				
9	BD3–H1960–00	RECTIFIER & REGULATOR ASSY	1	1				
10	BD3–H1940–00	STARTER RELAY ASSY	1	1				
11	BD3–H1948–00	BRACKET	1	1				
12	BD3–F8331–10	BOLT, LEG SHIELD	1	1				
13	BD3–F3456–10	WASHER	1	1				
14	BD3–F2969–10	SCREW, 1	2	2				
15	BD3–HA8L1–00	BLANK KEY 1	1	1				AP
16	BD3–HA8L2–00	BLANK KEY 2	1	1				AP
17	BD3–H3530–00	PILOT LIGHT ASSY	1	1				
18	BD3–H3530–10	PILOT LIGHT ASSY	1	1				

FIG. 36 ELECTRICAL 2

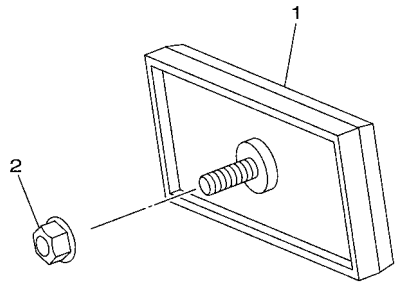

BD31110-R360

REF. NO.	PART NO.	DESCRIPTION	OCE	MEX				REMARKS
1	BD3–H5130–00	REAR REFLECTOR ASSY	1	1				
2	BD3–F1244–10	NUT	1	1				

FIG. 37 GRAPHICS

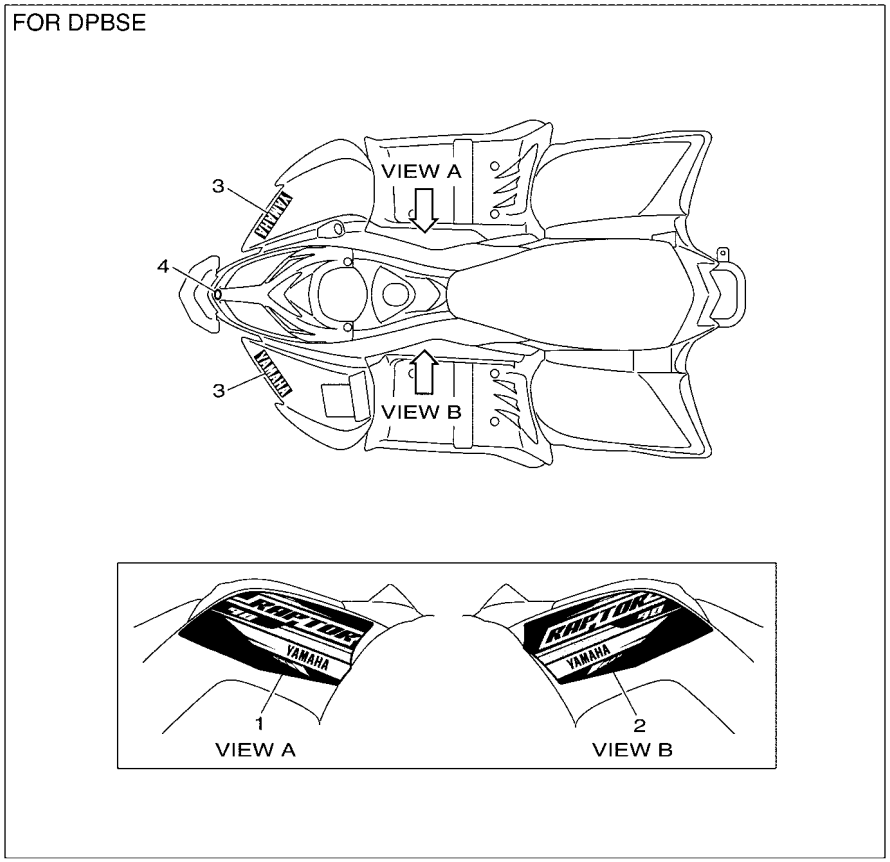

BD3A110-U370

REF. NO.	PART NO.	DESCRIPTION	OCE	MEX				REMARKS
1	BD3–F137N–20	GRAPHIC 1	1	1				FOR DPBSE
2	BD3–F137R–20	GRAPHIC 3	1	1				FOR DPBSE
3	BD3–F153E–20	EMBLEM, YAMAHA	2	2				FOR DPBSE
4	BD3–F175B–00	TUNING FORK MARK	1	1				

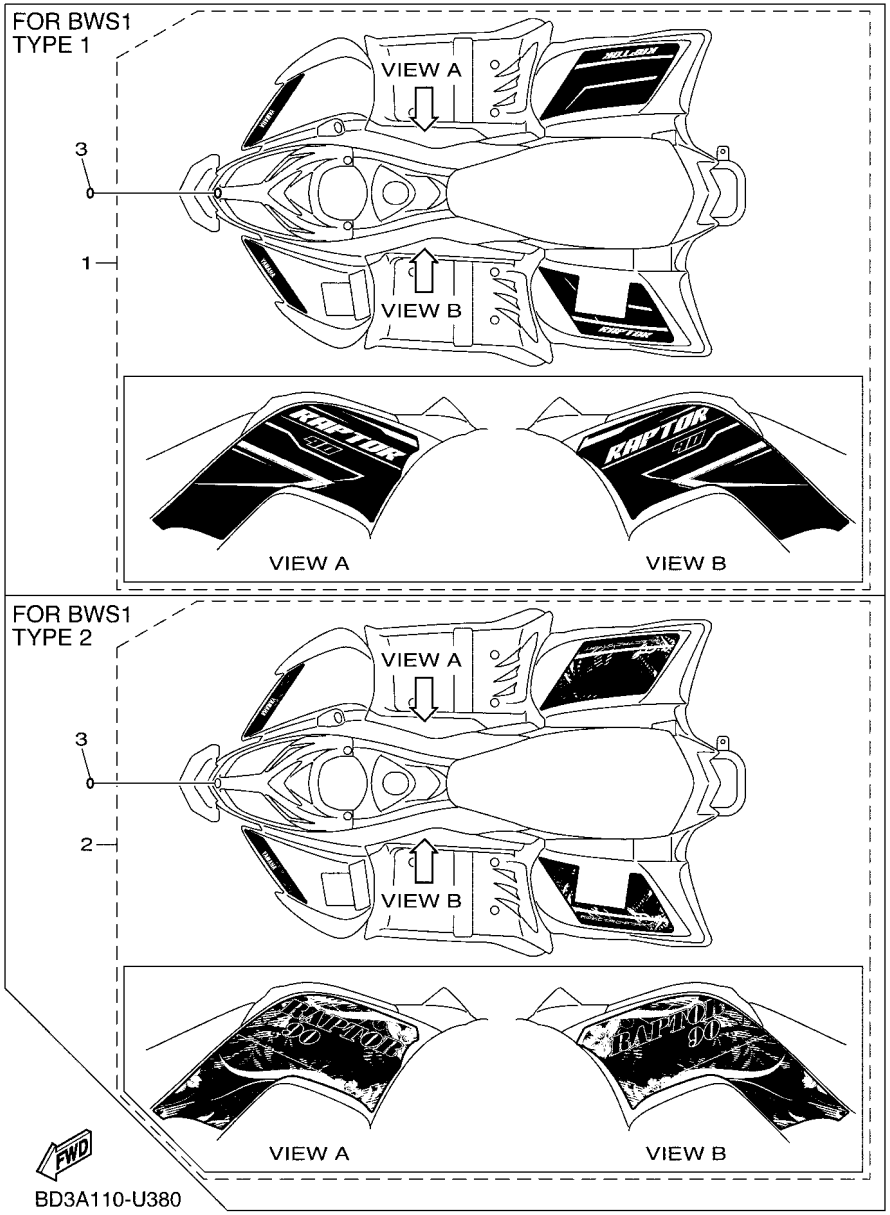

FIG. 38 GRAPHICS 2

REF. NO.	PART NO.	DESCRIPTION	OCE	MEX				REMARKS
1	BD3–F166A–00	GRAPHIC TRANSFER SET	1	1				FOR BWS1 TYPE 1
2	BD3–F166B–00	GRAPHIC TRANSFER SET 2	1	1				FOR BWS1 TYPE 2
3	BD3–F175B–00	TUNING FORK MARK	1	1				

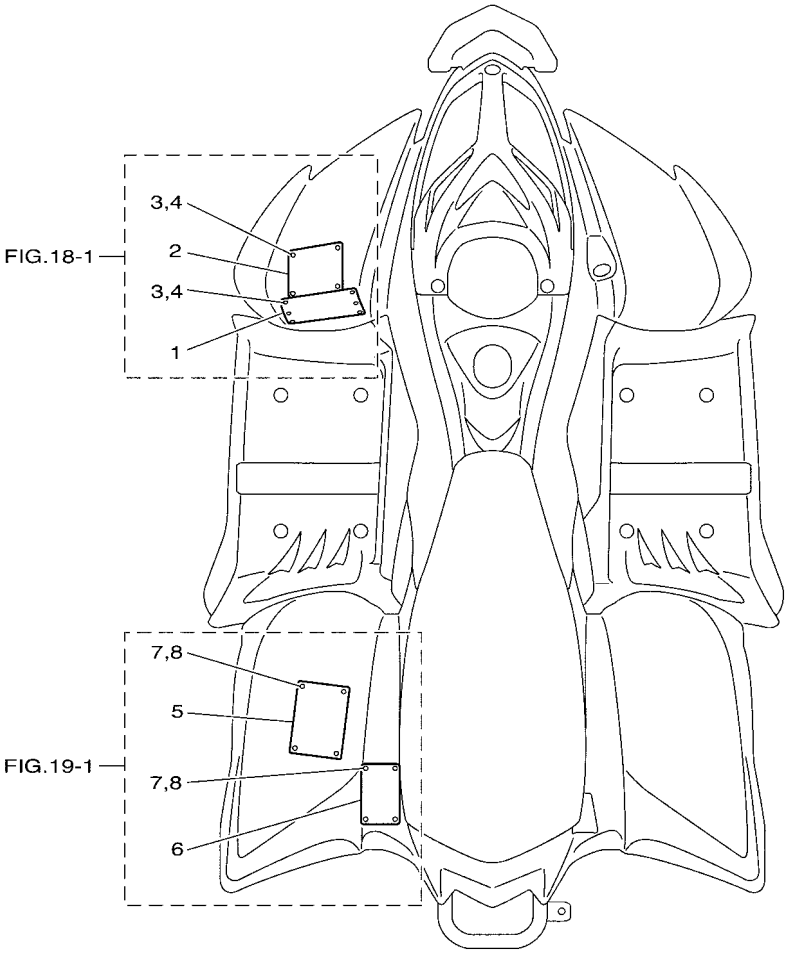

BD34700-S380

FIG. 39 EMBLEM & LABEL 1

REF. NO.	PART NO.	DESCRIPTION	OCE	MEX				REMARKS
1	BD3–F1568–60	LABEL, WARNING	1					
	BD3–F816R–20	LABEL, WARNING GENERAL INFO.		1				
2	BD3–F816L–00	LABEL, WARNING AGE	1					
	BD3–F816L–50	LABEL, WARNING AGE		1				
3	BD3–F1128–00	RIVET	10	10				
4	BD3–F1615–10	WASHER, SPECIAL 1	10	10				
5	BD3–F816M–60	LABEL, WARNING TIRE & LOAD	1					
	BD3–F816M–M0	LABEL, WARNING TIRE & LOAD		1				
6	BD3–F151H–00	LABEL 5	1					
	BD3–F816P–50	LABEL, WARNING PASSENGER		1				
7	BD3–F1128–00	RIVET	8	8				
8	BD3–F1615–10	WASHER, SPECIAL 1	8	8				

PART NO.	REF. NO.
BD3–E1103–00	1 – 1
BD3–E1125–00	7 – 16
BD3–E1126–00	7 – 15
BD3–E112E–00	1 – 3
BD3–E1164–00	7 – 11
BD3–E1166–00	7 – 12
BD3–E1169–00	1 – 8
BD3–E1179–10	1 – 12
BD3–E1181–00	1 – 17
BD3–E1186–00	1 – 5
BD3–E1190–10	1 – 4
BD3–E1192–00	1 – 2
BD3–E1193–00	1 – 6
BD3–E1194–00	1 – 7
BD3–E119A–00	1 – 13
BD3–E119B–00	1 – 9
	10 – 6
BD3–E1311–00	2 – 1
BD3–E1351–00	2 – 2
BD3–E1387–00	7 – 22
BD3–E1391–10	1 – 20
BD3–E1400–00	3 – 1
BD3–E1428–00	10 – 18
BD3–E1429–00	10 – 19
	14 – 4
BD3–E1458–10	5 – 4
BD3–E1478–00	14 – 14
BD3–E1545–00	3 – 2
BD3–E1620–00	3 – 3
BD3–E1631–00	3 – 4
BD3–E1633–00	3 – 5
BD3–E1634–00	3 – 6
BD3–E2111–00	4 – 2
BD3–E2113–00	4 – 5
BD3–E2114–00	4 – 6
BD3–E2116–00	4 – 4
BD3–E2117–00	4 – 7
BD3–E2118–00	4 – 8
BD3–E2119–00	4 – 3
BD3–E2121–00	4 – 1
BD3–E2146–00	4 – 10
BD3–E2151–00	4 – 9
BD3–E2157–10	1 – 19
	1 – 21
	2 – 3
	32 – 5
BD3–E2158–00	4 – 12
BD3–E2159–00	4 – 11

PART NO.	REF. NO.
BD3–E2170–00	5 – 1
BD3–E2176–00	5 – 2
BD3–E2190–00	5 – 3
BD3–E2210–00	5 – 5
BD3–E2213–00	5 – 6
BD3–E2228–10	7 – 28
BD3–E2231–00	5 – 9
BD3–E2241–00	5 – 8
BD3–E2289–10	9 – 14
BD3–E2299–10	14 – 25
BD3–E22A1–10	5 – 10
BD3–E2439–00	10 – 26
BD3–E2456–10	12 – 4
BD3–E2467–00	18 – 11
BD3–E2491–10	7 – 6
BD3–E2615–10	1 – 10
BD3–E261D–10	7 – 24
BD3–E2623–10	1 – 11
	10 – 31
BD3–E2842–00	14 – 9
BD3–E2843–00	10 – 9
BD3–E3016–00	12 – 8
BD3–E3274–10	7 – 30
BD3–E3300–00	6 – 1
BD3–E3318–00	1 – 25
BD3–E3365–10	6 – 2
BD3–E3411–00	10 – 4
BD3–E3469–00	10 – 5
BD3–E3516–00	1 – 18
	2 – 4
	10 – 7
	10 – 38
	11 – 8
BD3–E3556–00	1 – 16
BD3–E3573–10	5 – 7
BD3–E3574–00	9 – 7
BD3–E3577–10	7 – 7
	7 – 13
BD3–E3578–00	14 – 15
BD3–E3586–00	1 – 14
BD3–E3731–00	8 – 5
BD3–E3769–00	13 – 3
BD3–E3995–00	14 – 20
BD3–E4005–00	14 – 8
BD3–E4101–10	8 – 1
BD3–E4137–10	7 – 14
BD3–E414G–00	8 – 7
BD3–E4150–00	8 – 6

PART NO.	REF. NO.
BD3–E4159–10	7 – 17
BD3–E415A–00	8 – 14
BD3–E415A–00	8 – 13
BD3–E4216–10	8 – 23
BD3–E4271–00	1 – 15
BD3–E4325–00	8 – 18
BD3–E4331–00	8 – 4
BD3–E4348–00	8 – 15
BD3–E4349–00	8 – 16
BD3–E4358–00	9 – 10
BD3–E4384–00	8 – 20
BD3–E4385–00	8 – 11
BD3–E4386–00	8 – 9
BD3–E4392–00	8 – 10
BD3–E4397–00	8 – 12
BD3–E439D–10	8 – 2
BD3–E439G–00	8 – 3
BD3–E439H–10	8 – 21
BD3–E4408–10	7 – 1
BD3–E4412–10	7 – 4
BD3–E4424–00	7 – 5
BD3–E4429–10	14 – 28
BD3–E4439–10	1 – 24
BD3–E443B–00	8 – 24
BD3–E443E–00	7 – 8
BD3–E4446–10	7 – 10
BD3–E4451–00	7 – 3
BD3–E4457–00	7 – 9
BD3–E4458–00	7 – 31
BD3–E4472–00	7 – 2
BD3–E4495–00	7 – 32
BD3–E449C–10	8 – 22
BD3–E4521–00	8 – 19
BD3–E4561–00	14 – 12
BD3–E4581–10	8 – 17
BD3–E4594–10	13 – 1
BD3–E4595–10	13 – 16
BD3–E4611–00	9 – 2
BD3–E4613–00	9 – 1
BD3–E4628–00	9 – 8
BD3–E4711–00	9 – 3
BD3–E4714–00	9 – 4
BD3–E4777–10	7 – 19
BD3–E4780–00	9 – 6
BD3–E4814–00	14 – 5
BD3–E4844–00	10 – 11
BD3–E4849–00	7 – 27
BD3–E4919–10	7 – 18

PART NO.	REF. NO.
BD3–E4942–00	8 – 8
BD3–E5111–10	10 – 15
BD3–E5112–00	10 – 30
BD3–E5114–00	10 – 34
BD3–E511A–00	10 – 20
BD3–E511B–10	10 – 22
BD3–E511C–00	11 – 3
BD3–E5121–00	10 – 1
BD3–E5158–00	10 – 12
BD3–E5189–00	11 – 2
BD3–E5314–00	10 – 2
BD3–E5315–00	10 – 33
BD3–E531A–00	14 – 30
BD3–E5327–10	10 – 29
BD3–E5328–00	10 – 16
BD3–E5351–00	10 – 3
BD3–E5362–00	10 – 8
BD3–E5363–00	14 – 11
BD3–E5411–10	10 – 35
BD3–E5414–10	11 – 1
BD3–E5418–00	14 – 27
BD3–E5420–10	14 – 1
BD3–E5451–00	10 – 36
BD3–E5461–00	14 – 2
BD3–E5462–00	11 – 4
BD3–E5471–00	7 – 20
BD3–E5472–00	7 – 26
BD3–E5473–00	7 – 21
BD3–E5512–00	12 – 10
BD3–E551A–00	14 – 19
BD3–E5521–00	10 – 39
	12 – 11
BD3–E5524–10	12 – 14
BD3–E5532–00	12 – 12
BD3–E5570–00	12 – 15
BD3–E5597–00	12 – 7
BD3–E5600–10	12 – 1
BD3–E5613–10	12 – 16
BD3–E5615–10	12 – 17
	16 – 7
BD3–E5620–00	12 – 6
BD3–E5657–00	13 – 4
BD3–E5665–00	12 – 2
BD3–E5670–00	12 – 9
BD3–E5677–00	12 – 3
BD3–E5681–00	12 – 18
BD3–E5689–00	2 – 5
	5 – 11

PART NO.	REF. NO.
BD3–E5689–00	14 – 29
BD3–E5693–00	14 – 6
BD3–E5744–00	10 – 23
BD3–E5768–00	9 – 5
BD3–E5793–10	7 – 25
BD3–E6111–00	10 – 21
BD3–E6151–00	14 – 16
BD3–E6194–00	9 – 9
BD3–E6548–10	26 – 21
BD3–E6611–00	13 – 17
BD3–E6620–10	13 – 14
BD3–E662A–00	12 – 5
	14 – 10
BD3–E6777–10	9 – 12
BD3–E7051–00	15 – 1
BD3–E7058–00	15 – 3
BD3–E7156–00	13 – 2
BD3–E7253–00	14 – 21
BD3–E7285–00	14 – 18
BD3–E7421–00	14 – 17
BD3–E7430–00	14 – 13
BD3–E7446–10	14 – 24
BD3–E7451–00	14 – 23
BD3–E7479–00	15 – 2
BD3–E7496–00	16 – 4
BD3–E7498–00	14 – 26
BD3–E7520–00	14 – 22
BD3–E7611–00	13 – 12
BD3–E7621–00	13 – 7
BD3–E7623–00	13 – 9
BD3–E7625–00	13 – 10
BD3–E7632–00	13 – 8
BD3–E7637–00	13 – 11
BD3–E7641–00	13 – 18
BD3–E7646–00	13 – 13
BD3–E7647–10	7 – 29
BD3–E765G–10	15 – 4
BD3–E7678–00	14 – 7
BD3–E7683–00	13 – 15
BD3–E76F3–00	13 – 19
BD3–E8103–10	15 – 5
BD3–E8125–10	16 – 10
BD3–E8172–00	16 – 5
BD3–E8174–00	16 – 3
BD3–E8179–00	16 – 6
BD3–E8190–00	16 – 2
BD3–E8196–00	16 – 8
BD3–E8511–00	15 – 9

PART NO.	REF. NO.
BD3–E8531–00	15 – 10
BD3–E8540–00	15 – 11
BD3–E8542–00	15 – 8
BD3–E8545–00	15 – 7
BD3–F1110–10	17 – 1
BD3–F1128–00	39 – 3
	39 – 7
BD3–F112N–10	21 – 25
	25 – 21
	26 – 10
BD3–F113B–00	17 – 12
BD3–F11C5–10	24 – 6
BD3–F11C8–00	18 – 8
	19 – 4
BD3–F1244–10	36 – 2
BD3–F1293–10	25 – 20
BD3–F135J–10	22 – 11
BD3–F1376–00	19 – 7
BD3–F137N–20	37 – 1
BD3–F137R–20	37 – 2
BD3–F146E–10	16 – 9
	21 – 7
BD3–F1494–10	1 – 22
	9 – 13
BD3–F1500–10	18 – 1
BD3–F1500–20	18 – 1
BD3–F1500–70	18 – 1
BD3–F1500–80	18 – 1
BD3–F1513–00	17 – 7
BD3–F151H–00	39 – 6
BD3–F1531–00	29 – 21
BD3–F1532–00	29 – 22
BD3–F1535–10	20 – 7
BD3–F1536–10	20 – 13
BD3–F153E–20	37 – 3
BD3–F1556–10	18 – 6
BD3–F1556–20	18 – 6
BD3–F1566–00	23 – 6
BD3–F1568–60	39 – 1
BD3–F15A3–00	17 – 11
BD3–F1600–40	19 – 1
BD3–F1600–50	19 – 1
BD3–F1600–A0	19 – 1
BD3–F1600–B0	19 – 1
BD3–F1613–00	19 – 9
BD3–F1615–10	39 – 4
	39 – 8
BD3–F1631–10	34 – 7

PART NO.	REF. NO.
BD3–F1632–10	18 – 13
	19 – 8
	30 – 1
BD3–F1635–10	9 – 15
BD3–F1636–10	26 – 14
BD3–F1639–00	19 – 11
BD3–F1646–00	17 – 2
BD3–F1647–00	17 – 10
BD3–F1649–00	19 – 12
BD3–F166A–00	38 – 1
BD3–F166B–00	38 – 2
BD3–F1711–00	18 – 4
BD3–F1719–00	17 – 9
BD3–F171A–10	18 – 5
BD3–F171A–20	18 – 5
BD3–F1721–00	18 – 3
BD3–F1722–10	20 – 6
BD3–F1728–00	18 – 7
BD3–F1738–00	18 – 2
BD3–F1739–00	29 – 25
BD3–F175B–00	37 – 4
	38 – 3
BD3–F1791–10	21 – 12
	21 – 17
BD3–F1829–10	21 – 13
	21 – 18
BD3–F1839–10	17 – 5
BD3–F1968–00	29 – 34
BD3–F2110–00	20 – 1
BD3–F2123–00	20 – 2
BD3–F2125–10	31 – 2
BD3–F2126–00	20 – 4
BD3–F2128–00	20 – 3
BD3–F2129–00	22 – 14
BD3–F2143–10	28 – 8
BD3–F2149–10	18 – 9
	19 – 5
BD3–F2151–00	20 – 5
BD3–F2156–10	26 – 19
BD3–F2159–00	26 – 12
BD3–F2169–00	20 – 15
BD3–F2183–10	20 – 16
BD3–F2210–00	20 – 8
BD3–F2241–10	27 – 6
	27 – 12
BD3–F2243–10	26 – 8
BD3–F2245–10	25 – 19
BD3–F2246–00	21 – 27

PART NO.	REF. NO.
BD3–F2252–10	29 – 40
BD3–F2277–00	29 – 12
BD3–F2312–00	28 – 24
BD3–F2361–00	20 – 10
BD3–F2969–10	18 – 14
	35 – 14
BD3–F3165–00	21 – 23
BD3–F318J–10	23 – 3
BD3–F3346–00	29 – 35
BD3–F3350–10	22 – 3
BD3–F3356–10	18 – 15
BD3–F3357–00	29 – 33
BD3–F3364–00	22 – 7
BD3–F3427–00	13 – 5
	21 – 5
BD3–F3441–00	29 – 4
BD3–F3442–00	29 – 3
BD3–F3444–00	29 – 17
BD3–F3447–10	23 – 4
BD3–F344A–00	29 – 5
BD3–F3456–10	35 – 13
BD3–F3457–00	25 – 23
BD3–F3458–10	28 – 18
BW4–F3459–00	26 – 18
BD3–F3471–00	29 – 10
	29 – 30
BD3–F3492–10	23 – 8
BD3–F3511–00	21 – 20
BD3–F3517–00	22 – 8
BD3–F3521–00	21 – 21
BD3–F3526–00	22 – 6
BD3–F3527–00	22 – 15
BD3–F3570–00	22 – 5
BD3–F3580–00	22 – 4
BD3–F3737–00	26 – 15
BD3–F3753–00	29 – 20
BD3–F3767–10	28 – 12
BD3–F3769–10	20 – 14
BD3–F3778–10	17 – 6
BD3–F3812–00	21 – 4
BD3–F3813–00	21 – 1
BD3–F3818–00	21 – 3
BD3–F3831–10	21 – 14
	21 – 19
BD3–F3833–00	29 – 13
	29 – 26
BD3–F3834–10	13 – 6
	22 – 2

PART NO.	REF. NO.
BD3–F3834–10	22 – 10
BD3–F3841–10	21 – 10
	21 – 15
BD3–F3844–00	21 – 29
BD3–F3845–10	21 – 11
	21 – 16
BD3–F384N–00	21 – 2
BD3–F3856–10	21 – 6
BD3–F3868–00	21 – 30
BD3–F3872–00	21 – 9
BD3–F3876–10	9 – 11
	20 – 11
BD3–F3877–10	21 – 8
BD3–F38B2–10	21 – 22
BD3–F4110–00	23 – 1
BD3–F411M–10	23 – 14
BD3–F412G–10	23 – 10
BD3–F4148–10	18 – 10
	19 – 6
BD3–F4149–10	18 – 12
BD3–F4176–10	17 – 8
	19 – 10
BD3–F4177–10	21 – 26
BD3–F4178–10	17 – 4
BD3–F4181–00	23 – 7
BD3–F4339–00	23 – 9
BD3–F4366–00	23 – 12
BD3–F4374–10	21 – 28
BD3–F4398–00	24 – 8
BD3–F4477–10	28 – 21
BD3–F4500–00	23 – 5
BD3–F4531–10	21 – 24
BD3–F4560–10	23 – 11
BD3–F4592–10	25 – 18
	26 – 7
BD3–F4610–10	23 – 2
BD3–F4648–00	24 – 9
BD3–F4710–10	24 – 1
BD3–F4758–10	24 – 4
BD3–F4760–10	24 – 2
BD3–F476M–00	24 – 3
BD3–F4775–10	24 – 5
BD3–F4834–10	20 – 9
	22 – 1
BD3–F4864–00	23 – 13
BD3–F5105–10	25 – 8
	25 – 14
BD3–F510L–40	27 – 4

PART NO.	REF. NO.
BD3–F510L–40	27 – 10
BD3–F510S–00	25 – 1
	25 – 3
BD3–F5111–10	25 – 5
	25 – 11
BD3–F5117–10	25 – 7
	25 – 13
BD3–F511B–00	25 – 6
	25 – 12
BD3–F5121–20	27 – 1
BD3–F512A–00	25 – 22
	26 – 11
BD3–F5143–20	27 – 5
	27 – 11
BD3–F5151–20	27 – 3
	27 – 9
BD3–F5155–20	27 – 2
BD3–F5156–20	27 – 8
BD3–F5169–20	27 – 7
BD3–F5170–00	25 – 2
	25 – 4
	26 – 2
	26 – 4
BD3–F5180–00	25 – 17
	26 – 5
BD3–F518E–10	28 – 7
BD3–F51H1–10	25 – 9
	25 – 15
BD3–F51H2–10	25 – 10
	25 – 16
BD3–F530K–20	28 – 13
BD3–F5311–00	28 – 1
BD3–F5317–10	28 – 2
BD3–F5319–00	28 – 9
BD3–F531E–20	28 – 19
BD3–F5321–00	28 – 5
BD3–F5333–10	28 – 23
BD3–F5336–00	28 – 20
BD3–F5351–00	28 – 10
BD3–F5355–10	28 – 11
BD3–F5377–10	26 – 6
BD3–F537Y–00	28 – 4
BD3–F5381–10	26 – 13
BD3–F5382–10	26 – 9
BD3–F5386–00	26 – 17
BD3–F5388–10	20 – 12
BD3–F53C0–10	26 – 20
BD3–F53N4–00	28 – 3

PART NO.	REF. NO.
BD3–F53P3–00	26 – 1
	26 – 3
BD3–F5438–00	26 – 16
BD3–F6111–00	29 – 1
BD3–F6124–00	29 – 38
BD3–F6241–10	29 – 2
BD3–F6250–00	29 – 23
BD3–F628F–00	29 – 36
BD3–F628G–00	29 – 37
BD3–F6304–10	28 – 14
BD3–F6311–10	29 – 39
BD3–F6331–10	29 – 41
BD3–F6332–10	17 – 3
BD3–F6337–00	29 – 32
BD3–F6341–10	28 – 16
BD3–F6343–10	28 – 15
BD3–F6347–00	29 – 27
BD3–F6350–10	27 – 13
BD3–F6382–00	29 – 29
BD3–F639L–00	22 – 12
BD3–F639M–00	22 – 13
BD3–F6466–00	29 – 11
BD3–F7114–00	24 – 7
BD3–F7117–10	22 – 9
BD3–F7213–00	29 – 28
BD3–F7217–10	28 – 6
BD3–F7416–10	7 – 23
	28 – 25
BD3–F7434–10	29 – 6
BD3–F7435–10	35 – 4
BD3–F7438–10	28 – 17
BD3–F7453–00	30 – 3
BD3–F7463–00	30 – 2
BD3–F8100–10	17 – 13
BD3–F811A–10	17 – 14
BD3–F816L–00	39 – 2
BD3–F816L–50	39 – 2
BD3–F816M–60	39 – 5
BD3–F816M–M0	39 – 5
BD3–F816P–50	39 – 6
BD3–F816R–20	39 – 1
BD3–F8331–10	35 – 12
BD3–F8374–10	28 – 22
BD3–F845N–00	31 – 1
BD3–G1148–10	10 – 37
	14 – 3
BD3–G1228–10	12 – 13
BD3–G2544–10	10 – 13

PART NO.	REF. NO.
BD3–G2742–10	10 – 14
BD3–G3143–10	10 – 17
BD3–G3882–00	16 – 1
BD3–G3886–10	10 – 24
BD3–G4581–10	10 – 27
BD3–G5154–10	10 – 28
BD3–G5241–10	10 – 32
BD3–G6249–10	11 – 5
BD3–G7542–10	11 – 6
BD3–G7553–10	11 – 7
BD3–G8171–10	16 – 11
BD3–H1145–00	29 – 31
BD3–H1152–10	33 – 3
BD3–H1168–00	33 – 2
BD3–H1352–10	32 – 6
BD3–H1353–10	32 – 4
BD3–H1410–00	32 – 1
BD3–H1450–00	32 – 2
BD3–H1452–10	16 – 12
BD3–H1552–10	16 – 13
BD3–H1554–10	32 – 3
BD3–H1800–10	33 – 1
BD3–H1826–10	10 – 10
BD3–H1940–00	35 – 10
BD3–H1948–00	35 – 11
BD3–H1960–00	35 – 9
BD3–H2100–00	35 – 7
BD3–H2122–00	19 – 2
BD3–H2131–00	19 – 3
BD3–H2151–00	35 – 6
BD3–H2320–00	35 – 3
BD3–H2510–10	35 – 8
BD3–H2540–00	10 – 25
BD3–H2550–00	29 – 9
BD3–H2590–10	35 – 5
BD3–H2911–10	29 – 14
BD3–H3530–00	35 – 17
BD3–H3530–10	35 – 18
BD3–H3912–00	29 – 7
BD3–H3922–00	29 – 24
BD3–H3941–00	29 – 19
BD3–H3965–00	29 – 8
BD3–H3966–00	29 – 15
BD3–H3967–00	29 – 16
BD3–H3975–00	29 – 18
BD3–H411B–00	34 – 6
BD3–H4121–00	34 – 2
BD3–H4160–00	34 – 1

PART NO.	REF. NO.	PART NO.	REF. NO.	PART NO.	REF. NO.	PART NO.	REF. NO.	PART NO.	REF. NO.	PART NO.	REF. NO.
BD3–H4191–00	34 – 3										
BD3–H4300–00	34 – 4										
BD3–H4733–00	34 – 5										
BD3–H5130–00	36 – 1										
BD3–H5504–00	35 – 1										
BD3–H5546–00	35 – 2										
BD3–HA8L1–00	35 – 15										
BD3–HA8L2–00	35 – 16										
BD3–HA906–00	15 – 6										
94701–00372	1 – 23										